# GENERAL NOTES

1. PRIOR TO START OF PROJECT WORK, VERIFY ALL SITE CONDITIONS AND SUBMIT A PROJECT WORK PLAN TO THE ARCHITECT FOR REVIEW AND COMMENT. PRESENT THE WORK PLAN AT THE OWNER'S PRE-CONSTRUCTION MEETING. DO NOT BEGIN PRIOR TO THE 'PRE-CONSTRUCTION MEETING' AND WRITTEN AUTHORIZATION TO PROCEED IS ISSUED BY THE OWNER.
2. NOTIFY THE ARCHITECT IN WRITING OF ANY IDENTIFIED DISCREPANCIES WITHIN THE CONSTRUCTION DOCUMENTS PRIOR TO THE START OF WORK. DURING PERFORMANCE OF THE WORK, VERIFY ALL DIMENSIONS AND CONDITIONS AT THE JOB SITE AND CROSS-CHECK DETAILS AND DIMENSION SHOWN ON THE DRAWINGS WITH RELATED REQUIREMENTS ON THE ARCHITECTURAL, MECHANICAL, ELECTRICAL AND PLUMBING DRAWINGS. CONTRACTOR SHALL VERIFY ALL SITE CONDITIONS PRIOR TO STARTING WORK. IN ALL CASES WHERE A CONFLICT MAY OCCUR, THE ARCHITECT SHALL BE NOTIFIED AND WILL INTERPRET THE INTENT OF THE CONTRACT DOCUMENTS.
3. PRIOR TO THE COMMENCEMENT OF WORK, VERIFY LOCATIONS AND DEPTHS OF ALL UNDERGROUND UTILITIES THAT MAY BE AFFECTED BY CONSTRUCTION AND TAKE RESPONSIBILITY FOR DAMAGES TO SUCH UTILITIES CAUSED AS A RESULT OF CONSTRUCTION.
4. TAKE ALL NECESSARY PRECAUTIONARY MEASURES TO PROTECT THE PUBLIC AND ADJACENT PROPERTIES FROM DAMAGE THROUGHOUT CONSTRUCTION, INCLUDING DAMAGES TO UTILITIES, WALKS, WALLS, DRIVES, CURBS, ETC.
5. SECURE ALL NECESSARY PERMITS AND NOTIFY ALL UTILITY COMPANIES WITH UTILITIES ON THE SITE PRIOR TO THE CONSTRUCTION OF THE PROJECT. ADHERE TO ALL APPLICABLE LOCAL, STATE AND FEDERAL LAWS OR REGULATIONS PERTAINING TO THE PROJECT.
6. ESTABLISH AND MAINTAIN SITE SECURITY UNTIL PROJECT ACCEPTANCE.
7. USE DIMENSIONS SHOWN ON DRAWINGS FOR LAYOUT OF THE WORK. DO NOT USE SCALE DIMENSIONS FROM PLANS, SECTIONS OR DETAILS ON THE DRAWINGS.
8. REFER TO THE SPECIFICATIONS FOR ADDITIONAL REQUIREMENTS NOT SHOWN ON DRAWINGS.
9. DETAILS NOTED AS TYPICAL SHALL APPLY IN ALL CASES UNLESS SPECIFICALLY SHOWN OR NOTED OTHERWISE. WHERE NO SPECIFIC DETAIL IS SHOWN, THE CONSTRUCTION SHALL BE IDENTICAL OR SIMILAR TO THAT INDICATED FOR LIKE CASES OF CONSTRUCTION ON THIS PROJECT.
10. TAKE NOTE OF ALL GRADING AND DRAINAGE WAYS AND MAINTAIN THESE DRAIN WAYS FLOWS FREE OF OBSTRUCTIONS.
11. COORDINATE CONSTRUCTION OF PENETRATIONS, SLEEVES, VARIATIONS IN THE SLAB ELEVATIONS, DEPRESSED AREAS AND ALL OTHER ARCHITECTURAL, MECHANICAL, ELECTRICAL AND PLUMBING REQUIREMENTS.
12. DISPOSE ALL ELEMENTS DESIGNATED FOR REMOVAL IN A LEGAL MANNER. PROVIDE RECEIPTS AND LETTERS FROM DISPOSAL SITES TO OWNER AS REQUIRED BY THE OWNER.
13. PREPARE ALL SUBGRADES IN ACCORDANCE WITH RECOMMENDATIONS OF GEOTECHNICAL ENGINEER. PROVIDE PROOF OF ALL REQUIRED SOIL COMPACTION TO THE OWNER.
14. ALL CONSTRUCTION SHALL CONFORM TO ALL APPLICABLE CODES, REGULATIONS, AND ORDINANCES.
15. COORDINATE WORK OF SUBCONTRACTORS AND ALL OTHER CONTRACTORS TO ENSURE ORDERLY AND EFFICIENT COMPLETIONS OF ALL WORK.
16. INDEPENDENT OF NUMERIC QUANTITIES ON DRAWINGS OR IN THE PLANT SCHEDULE, DETERMINE THE PLANT MATERIAL QUANTITIES REQUIRED BY THE PLANS. SPACE PLANT MATERIALS AS SHOWN ON PLANS AND INDICATED IN PLANT SCHEDULE. PLANT MATERIALS SHALL CONFORM TO PLANT SCHEDULES AND SIZES SHALL BE THE MINIMUM INDICATED ON THE PLANT SCHEDULE OR LARGER. INSTALLATION OF LARGER PLANTS AT NO ADDITIONAL COST TO OWNER. ALL MEASUREMENTS SHALL BE IN ACCORDANCE WITH THE LATEST EDITION OF ANLA "STANDARDS FOR NURSERY STOCK".
17. PRIOR TO INSTALLATION, DEMARCATE LAYOUT OF ALL PLANTING BEDS, SEED AREAS, AND INDIVIDUAL TREES FOR REVIEW AND APPROVAL BY LANDSCAPE ARCHITECT. INCLUDE PERENNIAL GROUPINGS BY SPECIES FOR INTERNAL BED LAYOUTS. FLAGGING, STAKES, OR PAINT MAY BE USED TO DELINEATE LOCATIONS AS SCALED FROM THE PLANS. THE LANDSCAPE ARCHITECT WILL REVIEW THESE LOCATIONS WITH THE CONTRACTOR AND MAY MAKE MINOR ADJUSTMENTS AS NECESSARY. SUCH ADJUSTMENTS WILL BE AT NO ADDITIONAL COST TO THE OWNER.
18. SEEDING APPLIES TO ALL AREAS DISTURBED BY CONSTRUCTION ACTIVITIES EVEN IF ACTIVITIES EXTEND BEYOND THE APPROXIMATED SEEDING LIMITS INDICATED ON THE DRAWINGS. REPAIR ANY DISTURBED AREAS TO THE SAME CONDITION AS ORIGINALLY FOUND AND TO THE OWNER'S SATISFACTION. IN AREAS WHERE LAWN IS DISTURBED BEYOND THE LIMITS OF CONSTRUCTION, REPLACE LAWN WITH NEW LAWN SEED (INCLUDING TOPSOIL, SEED AND MULCH) AT NO ADDITIONAL COST TO THE OWNER. REFER TO SPECIFICATIONS FOR SEED MIXES.
19. UTILIZE HORTICULTURAL TREE WATERING BAGS FOR TREES PLANTED OUTSIDE OF IRRIGATED LANDSCAPE ZONES THROUGHOUT WARRANTY PERIOD. REPLENISH TREE WATERING BAGS REGULARLY SO THAT NONE REMAIN WITHOUT WATER FOR MORE THAN 24 HOURS.
20. MINIMIZE CULTIVATION WITHIN THE DRIPLINES OF EXISTING TREES. PREPARE SOIL FOR SEEDING BY MINIMIZING DISTURBANCE TO 4-INCH DEPTH. HAND CULTIVATE WHEN ENCOUNTERING ROOTS. NO HEAVY EQUIPMENT ALLOWED WITHIN DRIPLINE OF EXISTING TREES.
21. SHOVEL-CUT PLANTING BED EDGES UNLESS LABELED OTHERWISE.
22. MULCH PLANTING BEDS PER SPECIFICATIONS. KEEP MULCH 4 INCHES FROM TREE TRUNKS AND SHRUB CROWNS.
23. CONTACT "811" UNDERGROUND UTILITIES LOCATION CENTER PRIOR TO INSTALLATION OF PLANT MATERIAL AND IRRIGATION SYSTEM.
24. LEGALLY DISPOSE OF DEBRIS ASSOCIATED WITH PLANTING OFF-SITE.
25. ALL ABBREVIATIONS, SYMBOLS, AND LEGENDS SHOWN ON THIS DRAWING ARE NOT NECESSARILY USED.

# PRELIMINARY PLANTING NOTES

1. ALL TREES SHALL BE MIN. 36-INCH BOX.
2. ALL SHRUBS SHALL BE MIN. 1-GALLON-CAN SIZE.
3. PLANT MATERIALS SHALL CONFORM TO PLANT SCHEDULES AND SIZES SHALL BE THE MINIMUM INDICATED ON THE PLANT SCHEDULE OR LARGER. MINIMIZE CULTIVATION WITHIN THE DRIPLINES OF EXISTING TREES. PREPARE SOIL FOR SEEDING BY MINIMIZING DISTURBANCE TO 4-INCH DEPTH. HAND CULTIVATE WHEN ENCOUNTERING ROOTS. NO HEAVY EQUIPMENT ALLOWED WITHIN DRIPLINE OF EXISTING TREES.
4. SOILS AND PLANTING FOR BIORETENTION WILL COMPLY WITH APPENDIX B OF THE STORMWATER C.3 GUIDLINES.
5. NO TREES SHALL BE PLANTED OR STRUCTURES PLACED OVER THE UTILITY LINES OR EASEMENTS

# PRELIMINARY IRRIGATION NOTES

1. A PERMANENT, FULLY AUTOMATIC IRRIGATION SYSTEM WILL BE PROVIDED.
2. ALL PLANTING WILL BE IRRIGATED WITH AN AUTOMATICALLY CONTROLLED DRIP SYSTEM IN ACCORDANCE WITH THE REQUIREMENTS OF THE CITY OF CONCORD.
3. THE DESIGN TEAM AGREES TO COMPLY WITH THE REQUIREMENTS OF THE CURRENT WATER EFFICIENT LANDSCAPE ORDINANCE OF EAST BAY MUNICIPAL UTILITY DISTRICT.
4. THE ELECTRICAL SERVICE REQUIRED FOR THE IRRIGATION CONTROLLER WILL BE PROVIDED UNDER THE ELECTRICAL CONTRACT WORK.
5. THE INTENT OF THE IRRIGATION SYSTEM IS TO PROVIDE THE MINIMUM AMOUNT OF WATER REQUIRED TO SUSTAIN GOOD PLANT HEALTH.
6. MANUAL SHUT-OFF VALVES SHALL BE INSTALLED AS CLOSE AS POSSIBLE TO THE POINT OF CONNECTION OF THE WATER SUPPLY.
7. AT THE END OF THE REQUIRED CONTRACTOR MAINTENANCE PERIOD, THE OWNER SHALL PROVIDE REGULAR MAINTENANCE OF THE IRRIGATION SYSTEM TO ENSURE EFFICIENT USE OF WATER.
8. CONTRACTOR TO MAINTAIN IRRIGATION FOR ANY EXISTING TREES TO REMAIN. CONTRACTOR TO PROVIDE TEMPORARY IRRIGATION FOR ALL PROPOSED TREES UNTIL PERMANENT IRRIGATION IS INSTALLED.
9. RRIGATION FOR BIORETENTION WILL COMPLY WITH APPENDIX B OF THE STORMWATER C.3 GUIDLINES.

# PRELIMINARY MATERIALS NOTES

1. SEE SHEETS L5.0.0-L5.0.2 FOR SITE MATERIAL DETAILS.
2. IN ADDITION TO THOSE SHOWN, EXPANSION JOINTS SHALL BE LOCATED AT ALL FIXED SITE ELEMENTS.
3. HATCH PATTERNS ARE SHOWN FOR REFERENCE ONLY. HATCHES DO NOT REPRESENT DIRECTIONAL LAYOUT OR PATTERN OF MATERIALS.
4. REFER TO CIVIL AND SIGNAGE DRAWINGS FOR PARKING LOT STRIPING AND SIGNAGE.
5. REFER TO SIGNAGE DRAWINGS FOR SITE SIGNAGE.
6. REFER TO ELECTRICAL DRAWINGS FOR SITE LIGHTING.
7. SEE OTHER DISCIPLINE DRAWINGS AND SPECIFICATIONS FOR FURTHER INFORMATION REGARDING MATERIALS NOT DESCRIBED ON THESE PLANS.

# SITE DESIGN CALCULATIONS

| | AREA (SQFT) | AREA (ACRE) | PERCENTAGE % OUT OF NET LOT AREA |
|---|---|---|---|
| **NET LOT AREA** | 1,104,342 | 25.35 | 100.00% |
| | | | |
| **HARDSCAPE AREA** | 747,167 | 18.02 | 71.08% |
| VEHICULAR | 607,721 | 13.95 | 55.03% |
| PEDESTRIAN | 177,377 | 4.07 | 16.06% |
| | | | |
| **SOFTSCAPE AREA** | 319,224 | 7.33 | 28.92% |
| | | | |

# ACCESSIBILITY NOTES

1. ALL SITE WORK SHALL COMPLY WITH CURRENT CALIFORNIA BUILDING CODE (CALIFORNIA CODE OF REGULATIONS TITLE 24), CURRENT STANDARDS OF THE AMERICANS WITH DISABILITIES ACT (ADA), AND THE CURRENT FAIR HOUSING ACT DESIGN MANUAL.
2. ALL PAVING AREAS SHALL BE ACCESSIBLE PER TITLE 24. ALL PAVING SURFACES ARE TO BE STABLE, FIRM, AND SLIP RESISTANT WITH CROSS SLOPES NOT TO EXCEED 2% IN ANY DIRECTION, UNLESS OTHERWISE NOTED. ACCESSIBLE PATHS OF TRAVEL ARE BARRIER-FREE ACCESS ROUTES AT LEAST 48" CLEAR IN WIDTH AND WITHOUT ANY ABRUPT VERTICAL LEVEL CHANGES EXCEEDING 1/2" IF BEVELED AT 1:2 MAX SLOPE, OR VERTICAL LEVEL CHANGES NOT EXCEEDING 1/4" MAX. ALL ACCESSIBLE PATHWAYS SHALL BE SLOPED LESS THAN 5% IN THE DIRECTION OF TRAVEL, UNLESS OTHERWISE NOTED.
3. ALL ACCESSIBLE PATHS OF TRAVEL SHALL BE MAINTAINED FREE OF OVERHANGING OBSTRUCTIONS BELOW 80" ABOVE FINISH GRADE. OBJECTS WITH LEADING EDGES LOCATED BETWEEN 27" AND 80" ABOVE FINISH GRADE SHALL NOT PROTRUDE MORE THAN 4" HORIZONTALLY INTO THE PATH OF TRAVEL. EXCEPTIONS INCLUDE HANDRAILS, DOOR CLOSERS, AND DOOR STOPS. GUARDRAILS OR OTHER BARRIERS SHALL BE PROVIDED WHERE OBJECT PROTRUSION IS BEYOND THE LIMITS ALLOWED.

# REFERENCE SYMBOLS

SITE SECTION

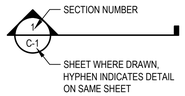


REVISION NUMBER AND EXTENT

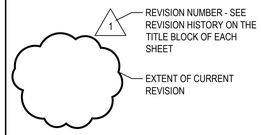


MATCHLINE REFERENCE

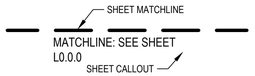


DRAWING TITLE SYMBOLS

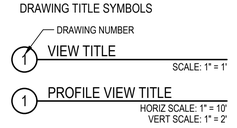


PLANT MATERIAL LABEL

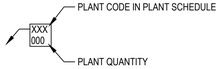


KAISER PERMANENTE®

**FOLSOM MOB**

285 Palladio Pkwy,
Folsom, CA 95630

**SMITHGROUP**

550 SOUTH HOPE STREET
SUITE 1950
LOS ANGELES, CA 90071
213.228.6900
smithgroup.com

| ISSUED FOR | REV | DATE |
|---|---|---|
| ENTITLEMENTS | | 9/26/2022 |

SEALS AND SIGNATURES

NOT FOR CONSTRUCTION

SHEET TITLE

GENERAL NOTES

PROJECT NUMBER 13931.000

SHEET NUMBER L0.0.0

Plot Date:

# SITE VIEWS

NOTE: COLOR MATERIALS BOARD AND RENDERINGS WILL BE SUBMITTED PRIOR TO THE PUBLIC HEARING

1 STAFF PATIO

N.T.S.

2 OUTDOOR AMPHITHEATER

N.T.S.

3 OUTDOOR REGISTRATION

N.T.S.

4 SOUTH ENTRANCE AND MAIN DROP OFF

N.T.S.

KAISER PERMANENTE®

**FOLSOM MOB**

285 Palladio Pkwy,
Folsom, CA 95630

**SMITHGROUP**

550 SOUTH HOPE STREET
SUITE 1950
LOS ANGELES, CA 90071
213.228.6900
smithgroup.com

| ISSUED FOR | REV | DATE |
|---|---|---|
| ENTITLEMENTS | | 9/26/2022 |

SEALS AND SIGNATURES

NOT FOR CONSTRUCTION

PROJECT NORTH

SHEET TITLE

SITE ILLUSTRATIVE PLAN AND SITE VIEWS

0' 50' 100' 200'

SCALE: 1" = 100'

PROJECT NUMBER 13931.000

SHEET NUMBER L0.0.1

Plot Date:

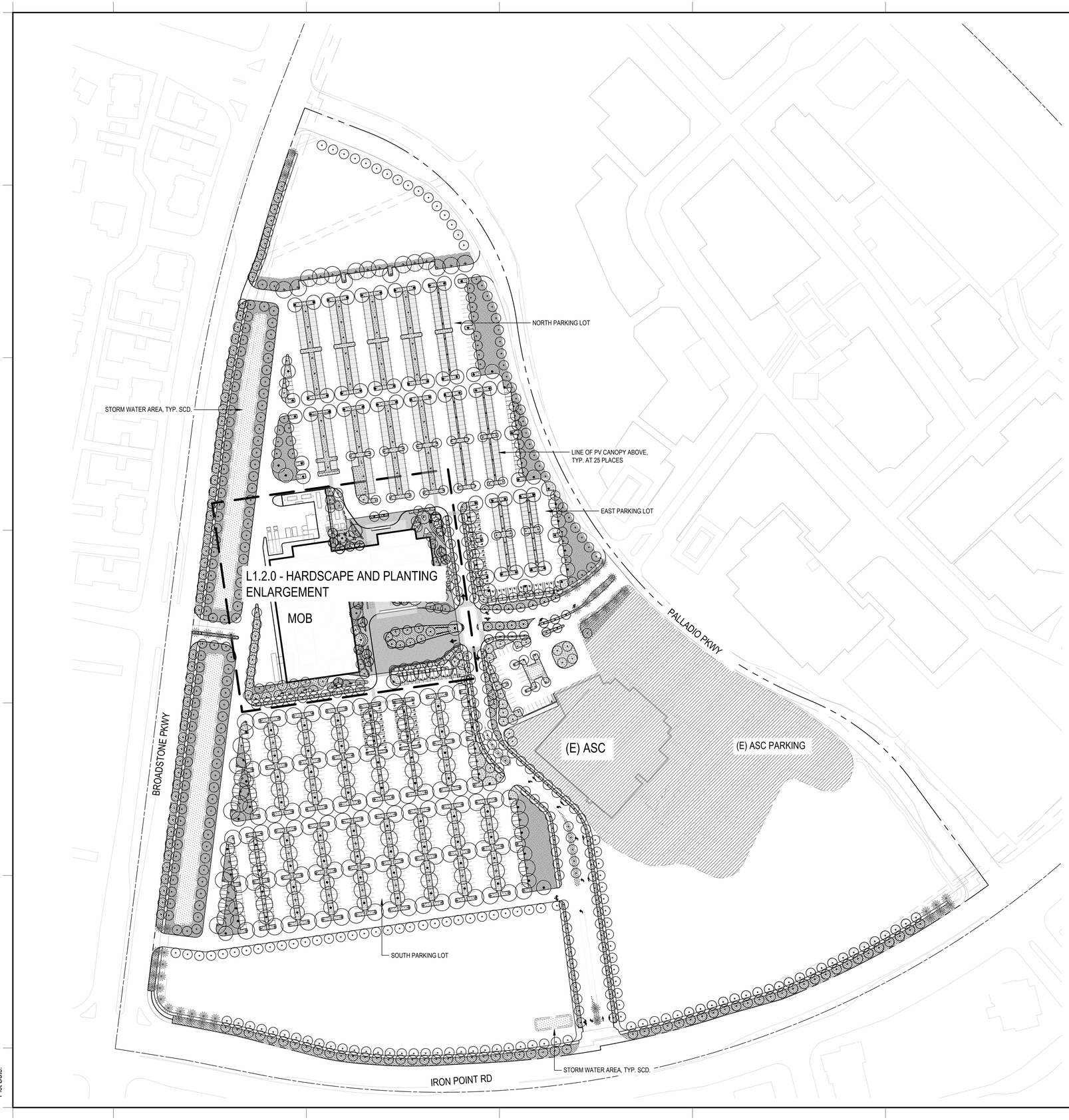


## SHEET NOTES

1. SEE CIVIL PLANS FOR GRADING AND DRAINAGE INFORMATION
2. FOR MATERIAL DETAILS, REFERENCE SHEET L5.0.0- L5.0.2
3. FOR PLANTING, SEE SHEETS L8.0.0-L8.0.2

## LEGEND

**MATERIALS**

- PROPERTY LINE
- LIMIT OF WORK LINE
- EXPANSION JOINT
- LIGHT DUTY CONCRETE
- SCORE JOINT
- CONCRETE PAVER - PEDESTRIAN
- CONCRETE PAVER - VEHICULAR
- ASPHALT
- TRUNCATED DOME PAVER, SCD
- IPE WOODEN PLATFORM
- PRECAST CONCRETE SEATWALL
- CROSSWALK PAVEMENT MARKING
- EXISTING, N.I.S

**PLANTING**

- SHADE TREE TYPE 1
- SHADE TREE TYPE 2
- FOCAL TREE
- ORNAMENTAL TREE
- PALM TREE
- NATIVE GRASSES
- PERENNIALS MIX 1
- PERENNIAL MIX 2
- PERENNIAL MIX 3
- PARKING LOT
- STREETSCAPE
- STORMWATER

KAISER PERMANENTE®

**FOLSOM MOB**

285 Palladio Pkwy,
Folsom, CA 95630

**SMITHGROUP**

550 SOUTH HOPE STREET
SUITE 1950
LOS ANGELES, CA 90071
213.228.6900
smithgroup.com

| ISSUED FOR | REV | DATE |
|---|---|---|
| ENTITLEMENTS | | 9/26/2022 |

SEALS AND SIGNATURES

NOT FOR CONSTRUCTION

PROJECT NORTH

SHEET TITLE

OVERALL HARDSCAPE AND PLANTING PLAN

0' 50' 100' 200'

SCALE: 1" = 100'

PROJECT NUMBER 13931.000

SHEET NUMBER L1.1.0

Plot Date:

## SHEET NOTES

1. ALL NEW PARKING LOT SHALL BE LANDSCAPED AT 20% MINIMUM OF THE TOTAL LOT AREA.
2. SHADE TREES PLANTING IN 36" BOX MINIMUM OR PV STRUCTURES SHALL BE INSTALLED TO PROVIDE SHADE 50% MINIMUM OF THE TOTAL SURFACE PARKING AREA WITHIN 15 YEARS.

### PARKING SHADE CALCULATION

**NORTH PARKING LOT**

- TOTAL LOT AREA: 216,678 SF
- TOTAL LANDSCAPED AREA: 56,949 SF OR 26.2% OF LOT AREA
- TOTAL PEDESTRIAN HARDSCAPE AREA: 0 SF
- TOTAL SURFACE PARKING AREA: 159,729 SF
- TOTAL SHADED SURFACE PARKING AREA: 80,083 SF OR 50.1% OF PARKING AREA

**EAST PARKING LOT**

- TOTAL LOT AREA: 48,506 SF
- TOTAL LANDSCAPED AREA: 15,233 SF OR 31.4% OF TOTAL PARKING LOT AREA
- TOTAL PEDESTRIAN HARDSCAPE AREA: 590 SF
- TOTAL SURFACE PARKING AREA: 32,683 SF
- TOTAL SHADED SURFACE PARKING AREA: 16,868 SF OR 51.6% OF PARKING AREA

**SOUTH PARKING LOT**

- TOTAL LOT AREA: 257,694 SF
- TOTAL LANDSCAPED AREA: 54,907 SF OR 21.3% OF TOTAL PARKING LOT AREA
- TOTAL PEDESTRIAN HARDSCAPE AREA: 1,061 SF
- TOTAL SURFACE PARKING AREA: 202,787 SF
- TOTAL SHADED SURFACE PARKING AREA: 110,732 SF OR 54.6% OF PARKING AREA

## LEGEND

PROPERTY LINE

PARKING LOT LINE

PLANTING AREA

SHADED PARKING AREA (COVERED BY PV OR TREE CANOPIES)

KAISER PERMANENTE®

**FOLSOM MOB**

285 Palladio Pkwy,
Folsom, CA 95630

**SMITHGROUP**

550 SOUTH HOPE STREET
SUITE 1950
LOS ANGELES, CA 90071
213.228.6900
smithgroup.com

| ISSUED FOR | REV | DATE |
|---|---|---|
| ENTITLEMENTS | | 9/26/2022 |

SEALS AND SIGNATURES

NOT FOR CONSTRUCTION

PROJECT NORTH

SHEET TITLE

PARKING SHADE CALCULATION

0' 50' 100' 200'

SCALE: 1" = 100'

PROJECT NUMBER 13931.000

SHEET NUMBER L1.1.1

Plot Date:

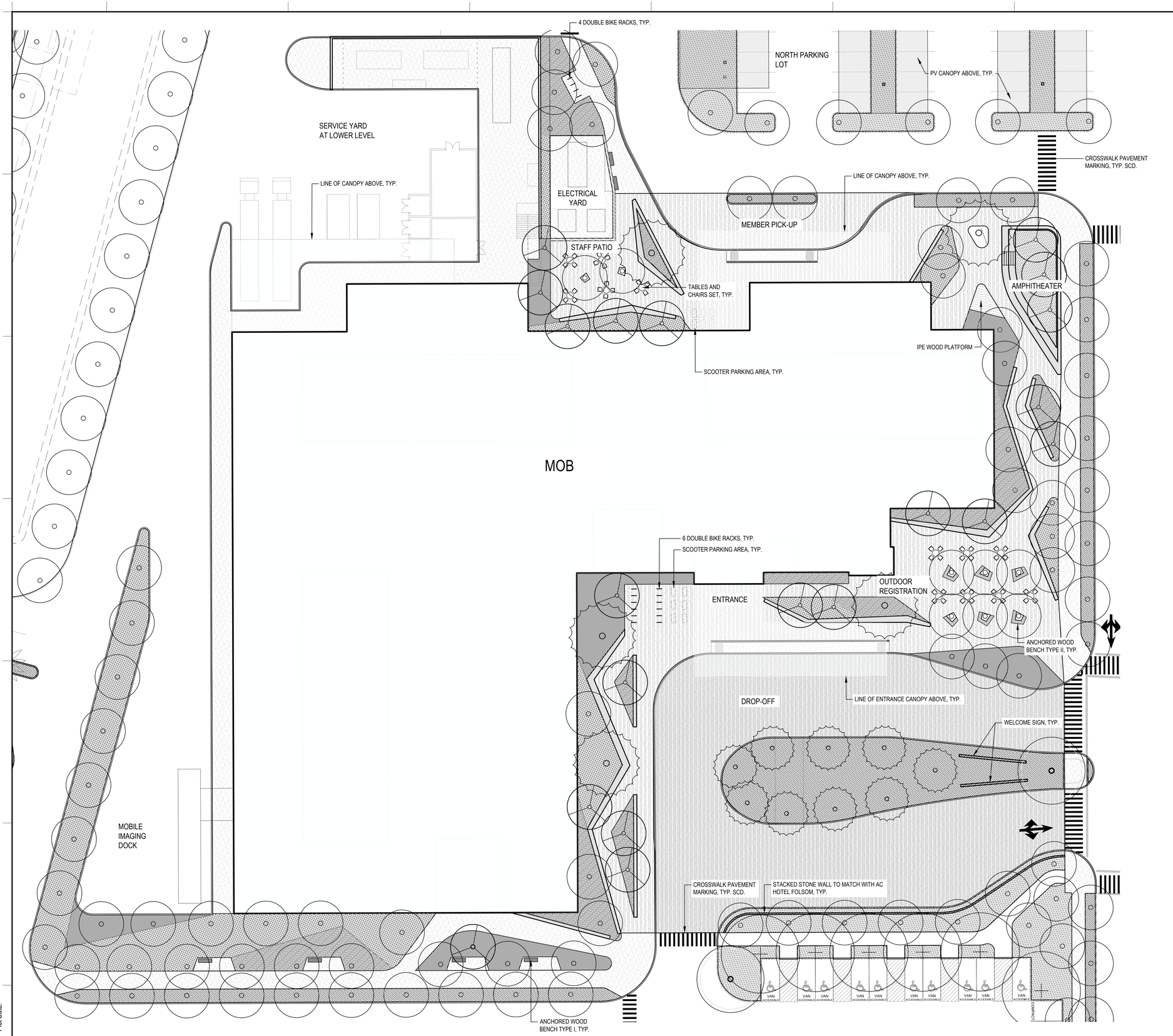


## SHEET NOTES

1. SEE CIVIL PLANS FOR GRADING AND DRAINAGE INFORMATION
2. FOR MATERIAL DETAILS, REFERENCE SHEET L5.0.0- L5.0.2
3. FOR PLANTING PALETTE AND DETAILS, SEE SHEETS L8.0.0-L8.0.2

## LEGEND

**MATERIALS**

- PROPERTY LINE
- LIMIT OF WORK LINE
- EXPANSION JOINT
- LIGHT DUTY CONCRETE
- SCORE JOINT
- CONCRETE PAVER - PEDESTRIAN
- CONCRETE PAVER - VEHICULAR
- ASPHALT
- TRUNCATED DOME PAVER, SCD
- IPE WOODEN PLATFORM
- PRECAST CONCRETE SEATWALL
- CROSSWALK PAVEMENT MARKING
- EXISTING, N.I.S

**PLANTING**

- SHADE TREE TYPE 1
- SHADE TREE TYPE 2
- FOCAL TREE
- ORNAMENTAL TREE
- PALM TREE
- NATIVE GRASSES
- PERENNIALS MIX 1
- PERENNIAL MIX 2
- PERENNIAL MIX 3
- PARKING LOT
- STREETSCAPE
- STORMWATER

KAISER PERMANENTE®

**FOLSOM MOB**

285 Palladio Pkwy,
Folsom, CA 95630

**SMITHGROUP**

550 SOUTH HOPE STREET
SUITE 1950
LOS ANGELES, CA 90071
213.228.6900
smithgroup.com

| ISSUED FOR | REV | DATE |
|---|---|---|
| ENTITLEMENTS | | 9/26/2022 |

SEALS AND SIGNATURES

NOT FOR CONSTRUCTION

TRUE NORTH PROJECT NORTH

SHEET TITLE

HARDSCAPE AND PLANTING ENLARGEMENT

0' 10' 20' 40'
SCALE: 1" = 20'

PROJECT NUMBER 13931.000

SHEET NUMBER L1.2.0

Plot Date:

## PIP CONCRETE PAVEMENT

**MATERIAL:** PIP CONCRETE WITH SAWCUT JOINTS
**COLOR:** INTEGRAL COLOR **COLOR ADDITIVE MANUFACTURER:** DAVIS COLOR OR EQUAL

## TRUNCATED DOME PAVER

**MANUFACTURER:** STEPSTONE SIZE: 12"X12"
**MATERIAL:** PRECAST CONCRETE **COLOR:** FEDERAL YELLOW

## PAVER

**MATERIAL:** CONCRETE **MANUFACTURER:** STEPSTONE
**SIZE:** 8"x 24" **COLOR:** PORCELAIN AND FRENCH GRAY

## SEAT WALL

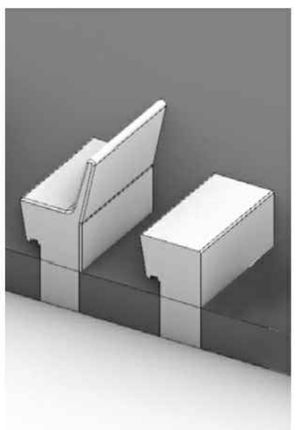

SEATWALL MODULES

**MANUFACTURER:** QCP OR EQUAL
**MATERIAL:** PRECAST CONCRETE **COLOR & FINISH**: TBD

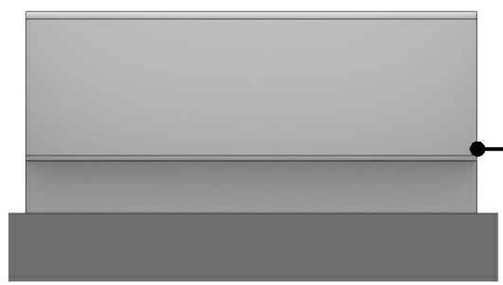

SEATWALL ELEVATION

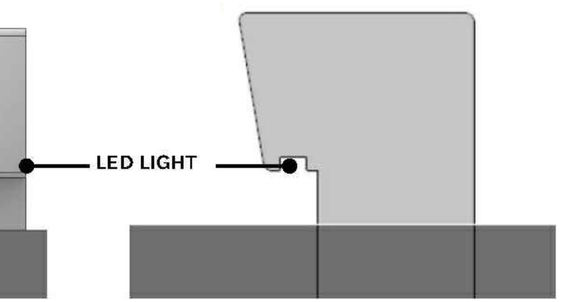


SEATWALL SECTION

## CAFE TABLE

**MANUFACTURER:** LANDSCAPE FORMS
**MODEL:** PARC CENTRE TABLE

## CHAIR

**MANUFACTURER:** LANDSCAPE FORMS
**MODEL:** 21 CHAIR

## BENCH TYPE I

**MANUFACTURER:** LANDSCAPE FORMS
**MODEL:** METRO40 REST BENCH WITH BACK AND ARMS

## BENCH TYPE II

**MANUFACTURER:** LANDSCAPE FORMS
**MODEL:** LINK BENCH WITH BACK AND ARMS

## TRASH RECEPTACLE

**MANUFACTURER:** LANDSCAPE FORMS **MODEL:** COLLECT RECEPTACLE **COLOR:** GRASS, BLACK AND BLUE BELL

## BIKE RACK

**MANUFACTURER:** LANDSCAPE FORMS
**MODEL:** BOLA BIKE RACK

Plot Date:

KAISER PERMANENTE®

**FOLSOM MOB**
285 Palladio Pkwy,
Folsom, CA 95630

**SMITHGROUP**

550 SOUTH HOPE STREET
SUITE 1950
LOS ANGELES, CA 90071
213.228.6900
smithgroup.com

| ISSUED FOR | REV | DATE |
|---|---|---|
| ENTITLEMENTS | | 9/26/2022 |

SEALS AND SIGNATURES

NOT FOR CONSTRUCTION

SHEET TITLE
HARDSCAPE DETAILS

PROJECT NUMBER 13931.000

SHEET NUMBER L5.0.0

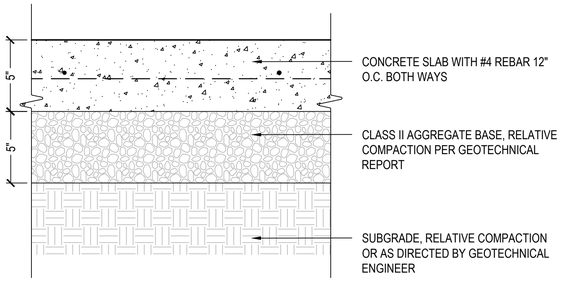


**NOTES**

1. FOR EXPANSION JOINT, REFERENCE DETAIL 3, 1-L2.5.1.
2. FOR CONTROL JOINT, REFERENCE DETAIL 4, 1-L2.5.1.
3. TOP CAST FINISH OR MATCH CAMPUS STANDARD.
4. PROVIDE SCORE JOINTS (SJ) AND EXPANSION JOINTS (EJ) AS SHOWN ON PLAN.
5. PROVIDE (EJ) MAX. 18' O.C. BOTH DIRECTIONS, ADJACENT TO BUILDINGS,WALLS, AND OTHER VERTICAL ELEMENTS, UNLESS OTHERWISE NOTED ON PLANS.

## 1 LIGHT DUTY CONCRETE PAVEMENT

Scale: 3":1'

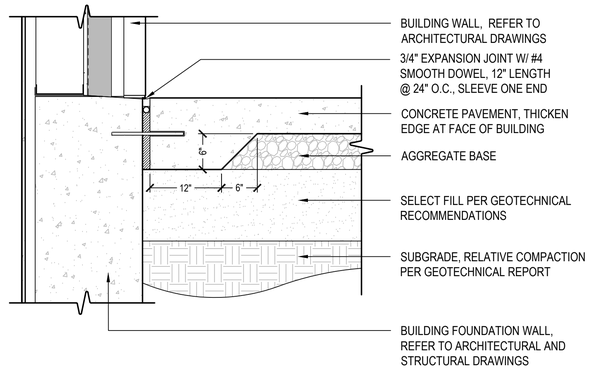


## 2 CONCRETE PAVEMENT AT BUILDING

Scale: 1":1'

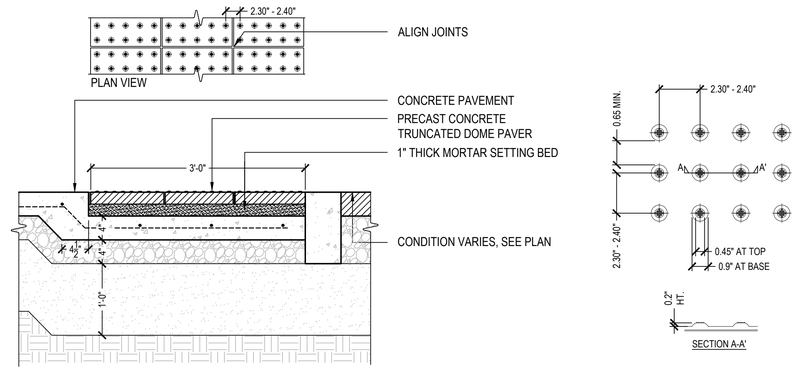


NOTES:

1. TRUNCATED DOMES MUST BE COLOR CONTRASTING TO ADJACENT PATH OF TRAVEL SURFACES, AND THE RAISED DOMES MUST MEET THE DIMENSIONAL REQUIREMENTS OF CBC SECTION 11B-705.
2. COLOR: FEDERAL YELLOW AND APPROXIMATE TO FS 33538 OF FEDERAL STANDARD 595C.
3. REFER TO CIVIL DETAILS FOR CITY STANDARD CURB RAMP AND TRUNCATED DOME DETAILS.
4. SEE SPECIFICATIONS FOR TRUNCATED DOME PAVER PRODUCT INFORMATION.

## 3 TRUNCATED DOME PAVER

Scale: 1":1'

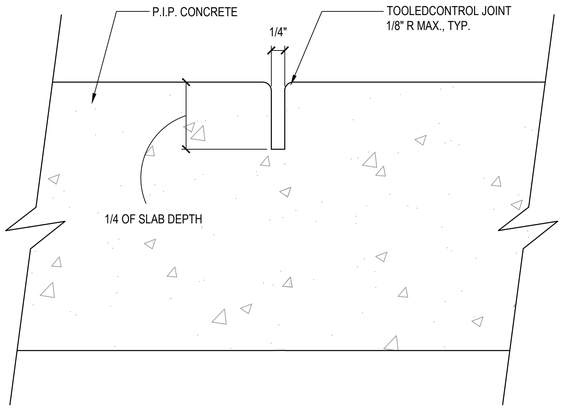


## 4 TOOLED CONCRETE PAVING SCORE JOINTS

Scale: 3/4":1'

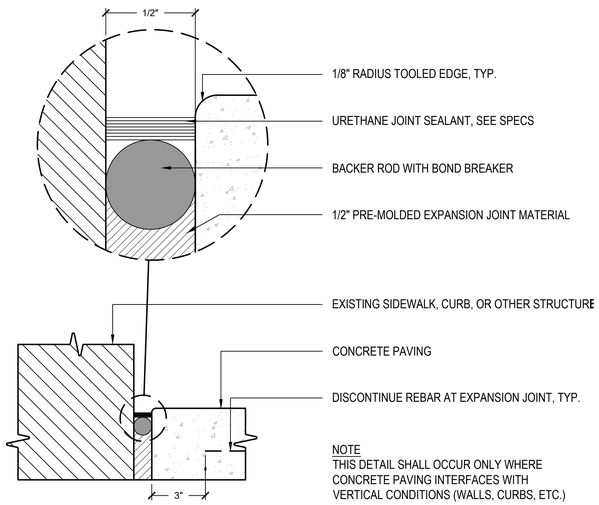


NOTE
THIS DETAIL SHALL OCCUR ONLY WHERE CONCRETE PAVING INTERFACES WITH VERTICAL CONDITIONS (WALLS, CURBS, ETC.)

## 5 TOOLED CONCRETE EXPANSION JOINT

Scale: 1/4":1'

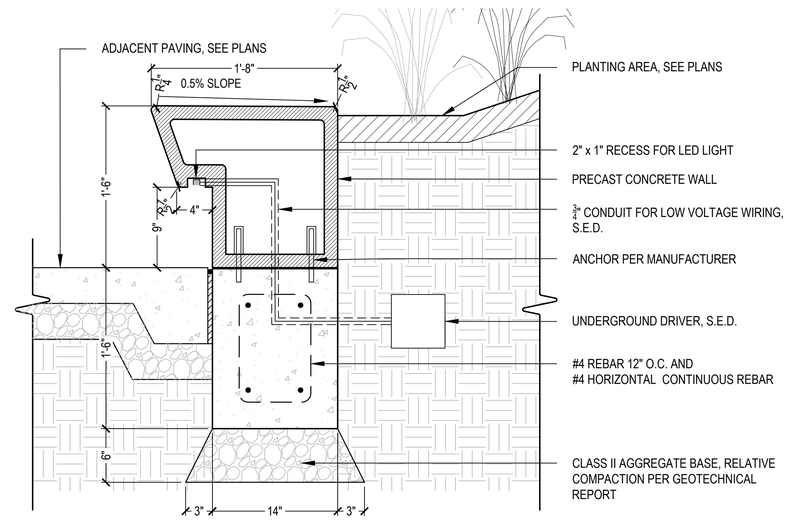


## 6 PRECAST CONCRETE SEATWALL

Scale: 1-1/2":1'

KAISER PERMANENTE®

**FOLSOM MOB**

285 Palladio Pkwy,
Folsom, CA 95630

**SMITHGROUP**

550 SOUTH HOPE STREET
SUITE 1950
LOS ANGELES, CA 90071
213.228.6900
smithgroup.com

| ISSUED FOR | REV | DATE |
|---|---|---|
| ENTITLEMENTS | | 9/26/2022 |

SEALS AND SIGNATURES

NOT FOR CONSTRUCTION

SHEET TITLE
HARDSCAPE DETAILS

PROJECT NUMBER 13931.000

SHEET NUMBER L5.0.1

Plot Date:

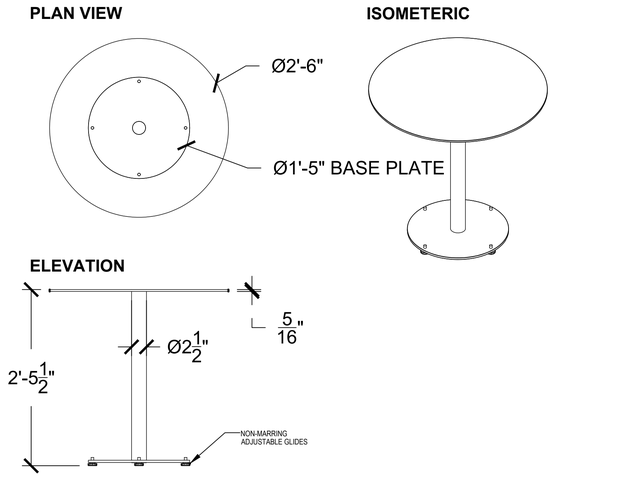


1 CAFE TABLE

Scale: 1":1'

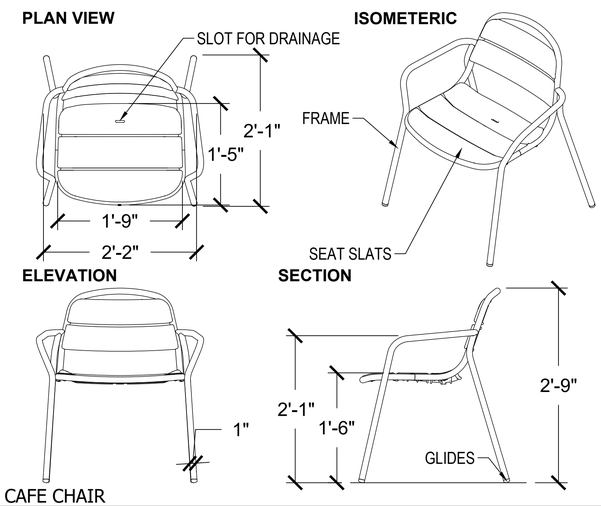


2 CAFE CHAIR

Scale: 1":1'

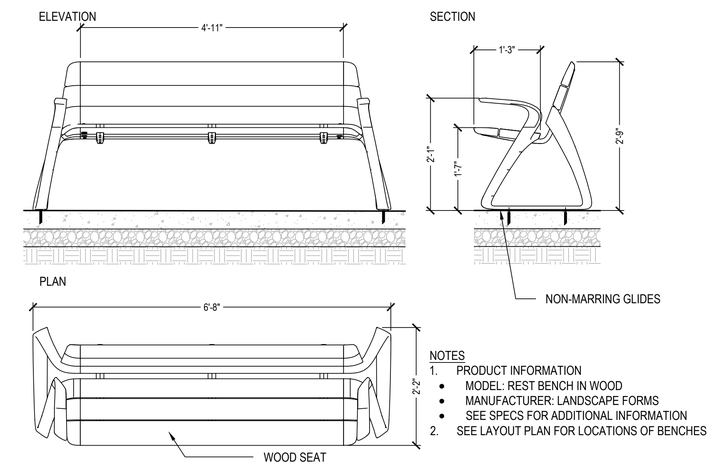


NOTES
1. PRODUCT INFORMATION
   - MODEL: REST BENCH IN WOOD
   - MANUFACTURER: LANDSCAPE FORMS
   - SEE SPECS FOR ADDITIONAL INFORMATION
2. SEE LAYOUT PLAN FOR LOCATIONS OF BENCHES

3 BENCH TYPE I

Scale: 3/4":1'

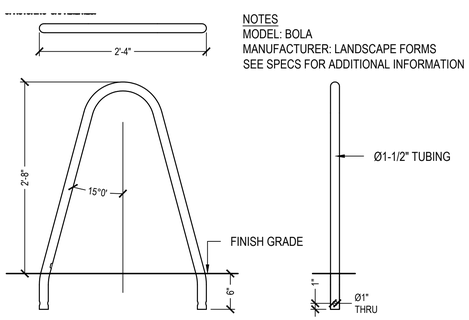


NOTES
MODEL: BOLA
MANUFACTURER: LANDSCAPE FORMS
SEE SPECS FOR ADDITIONAL INFORMATION

4 BIKE RACK

Scale: 1":1'

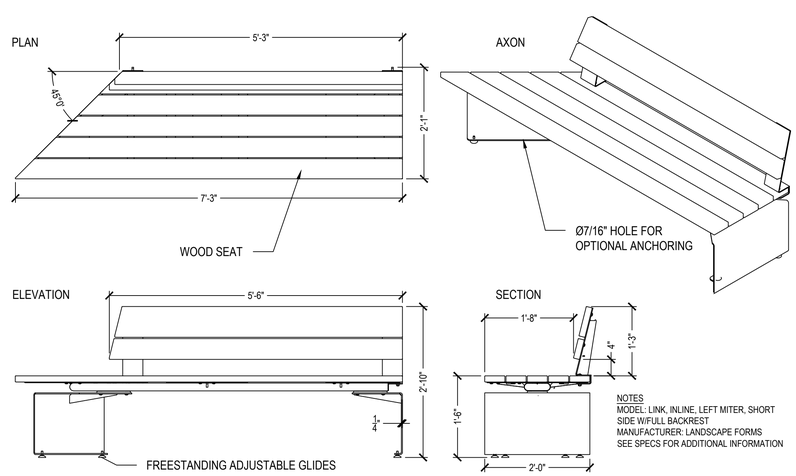


NOTES
MODEL: LINK, INLINE, LEFT MITER, SHORT SIDE W/FULL BACKREST
MANUFACTURER: LANDSCAPE FORMS
SEE SPECS FOR ADDITIONAL INFORMATION

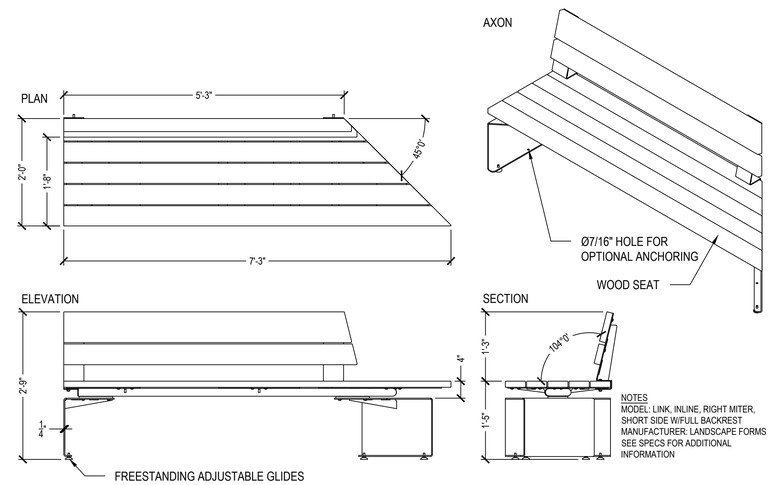


NOTES
MODEL: LINK, INLINE, RIGHT MITER, SHORT SIDE W/FULL BACKREST
MANUFACTURER: LANDSCAPE FORMS
SEE SPECS FOR ADDITIONAL INFORMATION

5 BENCH TYPE II

Scale: 3/4":1'

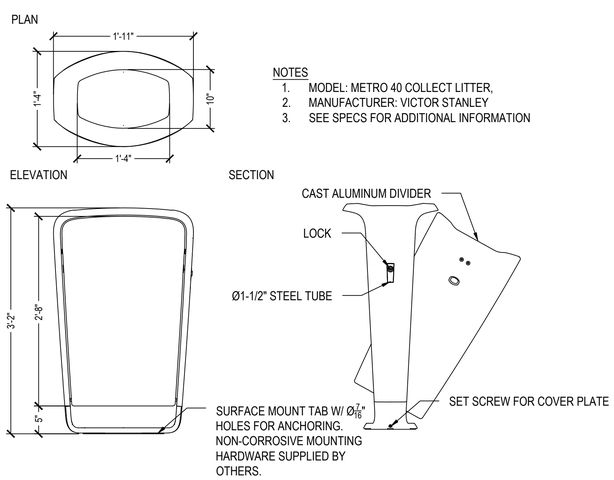


NOTES
1. MODEL: METRO 40 COLLECT LITTER,
2. MANUFACTURER: VICTOR STANLEY
3. SEE SPECS FOR ADDITIONAL INFORMATION

6 RECEPTACLE

Scale: 3":1'

Plot Date:

KAISER PERMANENTE®

**FOLSOM MOB**

285 Palladio Pkwy,
Folsom, CA 95630

**SMITHGROUP**

550 SOUTH HOPE STREET
SUITE 1950
LOS ANGELES, CA 90071
213.228.6900
smithgroup.com

| ISSUED FOR | REV | DATE |
|---|---|---|
| ENTITLEMENTS | | 9/26/2022 |

SEALS AND SIGNATURES

NOT FOR CONSTRUCTION

SHEET TITLE
HARDSCAPE DETAILS

PROJECT NUMBER
13931.000

SHEET NUMBER
L5.0.2

# TREES

## SHADE TREE TYPE 1

OLEA EUROPAEA
OLIVE

QUERCUS ILEX
HOLLY OAK

SCHINUS MOLLE
CALIFORNIA PEPPER TREE

## SHADE TREE TYPE 2

QUERCUS AGRIFOLIA
COAST LIVE OAK

LAURUS NOBILIS
SWEET BAY

RHUS LANCEA
AFRICAN SUMAC

## FOCAL TREE

PHOENIX CANARIENSIS
CANARY ISLAND DATE PALM

PISTACIA CHINENSIS
CHINESE PISTACHE

CHILOPSIS LINEARIS
DESERT WILLOW

## ORNAMENTAL TREE

LAGERSTROEMIA SPP., HYBRID
CRAPE MYRTLE

ARBUTUS UNEDO
STRAWBERRY TREE

CERCIS OCCIDENTALIS
WESTERN REDBUD

PARKINSONIA 'DESERT MUSEUM'
DESERT MUSEUM PALO VERDE

# SHRUBS AND GROUNDCOVER

## NATIVE GRASSES

ARCTOSTAPYLOS 'EMERALD CARPET
CARPET MANZANITA

ROSMARINUS OFFICINALIS
ROSEMARY

LOMANDRA LONGIFOLIA 'LOMLON'
LIME TUFF DWARF MAT RUSH

MUHLENBERGIA RIGENS
DEER GRASS

## PLAZA

AGAVE AMERICANA
AGAVE

FESTUCA GLAUCA
BLUE FESCUE

LAVANDULA STOECHAS
SPANISH LAVENDER

PHORMIUM TENAX
NEW ZEALAND FLAX

BOUTELOUA GRACILIS
BLUE GRAMA

HELICTOTRICHON SEMPERVIRENS
BLUE OAT GRASS

ANIGOZANTHOS FLAVIDUS
KANGAROO PAW

ALOE 'BLUE ELF'
BLUE ELF ALOE

## PARKING LOT + STREETSCAPE

CISTUS SPP.
ROCKROSE

JUNIPERUS CHINENSIS GOLD COAST
GOLD COAST JUNIPER

NERIUM OLEANDER
OLEANDER

## STORMWATER

CHONDROPETALUM TECTORUM
CAPE REED

IRIS DOUGLASIANA
DOUGLAS IRIS

ROSA CALIFORNICA
CALIFORNIA WILD ROSE

KAISER PERMANENTE®

**FOLSOM MOB**

285 Palladio Pkwy,
Folsom, CA 95630

**SMITHGROUP**

550 SOUTH HOPE STREET
SUITE 1950
LOS ANGELES, CA 90071
213.228.6900
smithgroup.com

| ISSUED FOR | REV | DATE |
|---|---|---|
| ENTITLEMENTS | | 9/26/2022 |

SEALS AND SIGNATURES

NOT FOR CONSTRUCTION

SHEET TITLE
PRELIMINARY PLANT PALETTE

PROJECT NUMBER 13931.000

SHEET NUMBER L8.0.0

Plot Date:

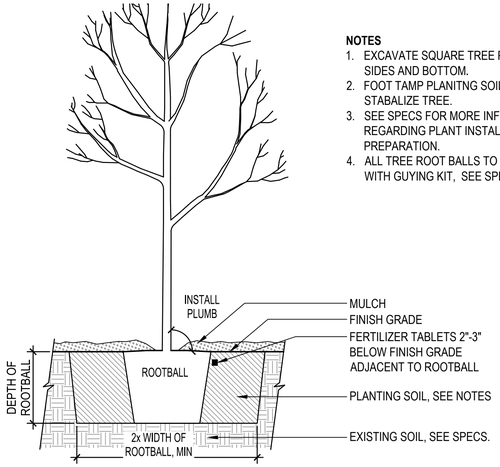


**NOTES**
1. EXCAVATE SQUARE TREE PITS. SCARIFY SIDES AND BOTTOM.
2. FOOT TAMP PLANITNG SOIL IN 6" LIFTS TO STABALIZE TREE.
3. SEE SPECS FOR MORE INFORMATION REGARDING PLANT INSTALLATION AND SOIL PREPARATION.
4. ALL TREE ROOT BALLS TO BE ANCHORED WITH GUYING KIT, SEE SPECS.

## 1 TREE PLANTING

Scale: NTS

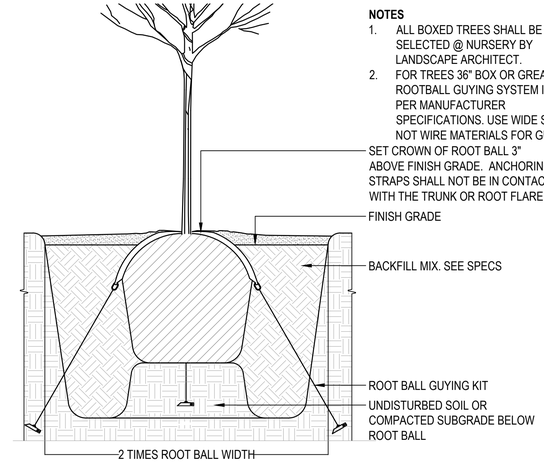


**NOTES**
1. ALL BOXED TREES SHALL BE SELECTED @ NURSERY BY LANDSCAPE ARCHITECT.
2. FOR TREES 36" BOX OR GREATER, ROOTBALL GUYING SYSTEM INSTALL PER MANUFACTURER SPECIFICATIONS. USE WIDE STRAPS, NOT WIRE MATERIALS FOR GUYING

## 2 TREE GUYING

Scale: NTS

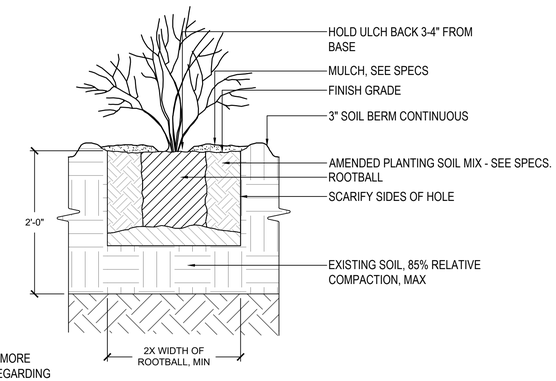


NOTE:
1. SEE SPECS FOR MORE INFORMATION REGARDING PLANT INSTALLATION AND SOIL PREPARATION.

## 3 SHRUB PLANTING

Scale: NTS

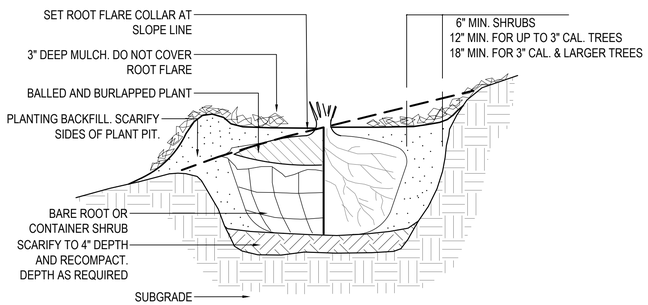


| SIZE | STAKING / GUYING | MULCH SAUCER DIMENSION (NON-BED AREAS) |
|---|---|---|
| • SHRUB | • NONE | • 3' DIA. |
| • TREE: 2" CAL. & SMALLER | • DOUBLE STAKE | • 4' DIA. |
| • TREE: BETWEEN 2.5" & 3.5" CAL. | • TRIPLE STAKE | • 5' DIA. |
| • TREE: LARGER THAN 3.5" CAL. | • TRIPLE GUY | • 8' DIA. |

**NOTES**
1. REMOVE BURLAP FROM TOP 1/3 OF BALL, OR, WITH CONTAINER PLANTS, REMOVE POTS AND SEPARATE POT BOUND ROOTS AS SPECIFIED.
2. DO NOT PRUNE

## 4 PLANTING ON SLOPE

Scale: NTS

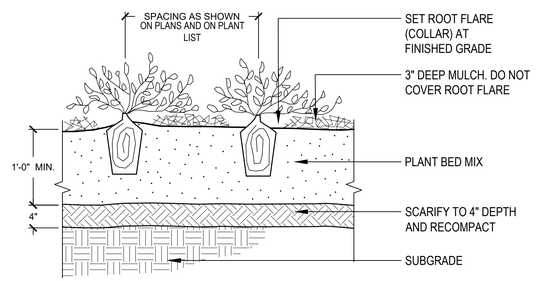


**NOTE:**
1. DEPTH OF PLANTING BACKFILL MUST BE CONFIRMED AND LIMITS OF BED SHOWN ON THE PLANS AND LABELED ACCORDINGLY. USE SAME DEPTH THROUGHOUT PROJECT AND MATCH WITH SHRUB PLANTING - BED
2. VERIFY QUALITY OF SUBSOIL IF CLAY - BED UNDER DRAIN MUST BE CONSIDERED TO PREVENT ROOT ROT.
3. CONTAINER PLANTS: REMOVE POTS AND SEPARATE POT BOUND ROOTS AS SPECIFIED

## 5 GROUND COVER, NATIVE GRASSES AND PERENNIALS

Scale: 1":1'

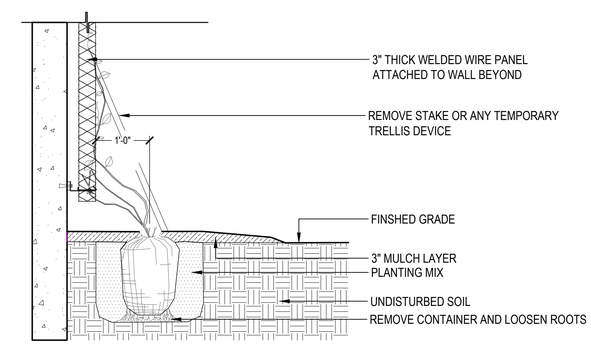


NOTES:
1. REFER TO PLANTING PLAN FOR PLANT SPACING AND SPECIES SELECTION.
2. REFER TO IRRIGATION PLAN FOR IRRIGATION.

## 6 VINE PLANTING

Scale: NTS

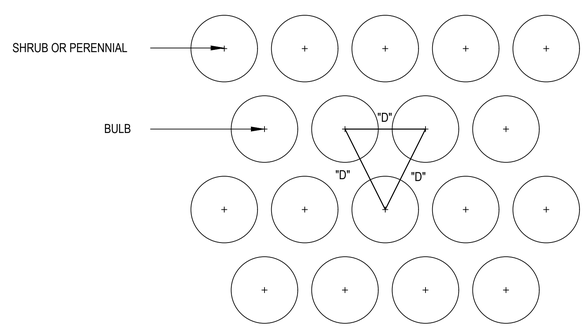


D=DIMENSION OF PLANT SPACING (SHRUB, GROUNDCOVER OR PERENNIAL) AS INDICATED ON PLANS.

**NOTES**
1. SEE PLAN FOR LOCATION.

## 7 PLANT SPACING

Scale: 1":1'

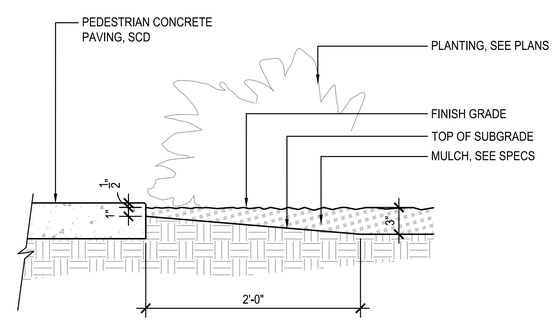


## 8 MULCH AT PAVING

Scale: 3/4":1'

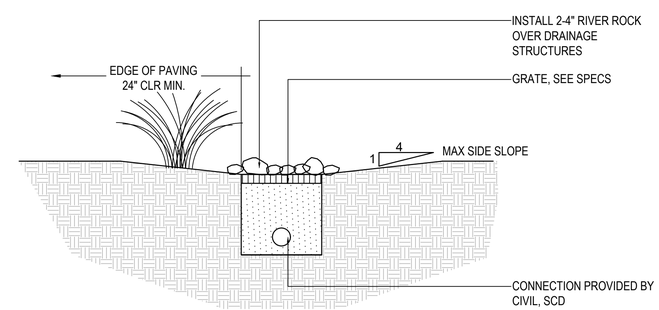


## 9 AREA DRAIN IN PLANTING

Scale: 3/4":1'

KAISER PERMANENTE®

**FOLSOM MOB**

285 Palladio Pkwy,
Folsom, CA 95630

**SMITHGROUP**

550 SOUTH HOPE STREET
SUITE 1950
LOS ANGELES, CA 90071
213.228.6900
smithgroup.com

| ISSUED FOR | REV | DATE |
|---|---|---|
| ENTITLEMENTS | | 9/26/2022 |

SEALS AND SIGNATURES

NOT FOR CONSTRUCTION

SHEET TITLE
PLANTING DETAILS

PROJECT NUMBER 13931.000

SHEET NUMBER L8.0.1

Plot Date:

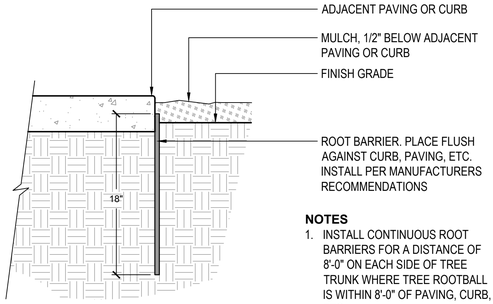


**NOTES**

1. INSTALL CONTINUOUS ROOT BARRIERS FOR A DISTANCE OF 8'-0" ON EACH SIDE OF TREE TRUNK WHERE TREE ROOTBALL IS WITHIN 8'-0" OF PAVING, CURB, ETC.

1 ROOT BARRIER

Scale: 1":1'

## TREES

**SHADE TREE TYPE 1**

| SYM. | QTY. | SCIENTIFIC NAME | COMMON NAME | SIZE | WATER USE | HEIGHT | SPREAD |
|---|---|---|---|---|---|---|---|
| | 680 | OLEA EUROPAEA | OLIVE | 36" BOX | VL | 20'-35' | 20'-35' |
| | | QUERCUS ILEX | HOLLY OAK | 36" BOX | L | 30'-60' | 30'-60' |
| | | SCHINUS MOLLE | CALIFORNIA PEPPER TREE | 36" BOX | VL | 25'-40' | 25'-40' |

**SHADE TREE TYPE 2**

| SYM. | QTY. | SCIENTIFIC NAME | COMMON NAME | SIZE | WATER USE | HEIGHT | SPREAD |
|---|---|---|---|---|---|---|---|
| | 312 | QUERCUS AGRIFOLIA | COAST LIVE OAK | 48" BOX | VL | 35'-75' | 35'-50' |
| | | LAURUS NOBILIS | SWEET BAY | 48" BOX | L | 15'-40' | 15'-40' |
| | | RHUS LANCEA | AFRICAN SUMAC | 36" BOX | L | 20'-30' | 20'-35' |

**FOCAL TREE**

| SYM. | QTY. | SCIENTIFIC NAME | COMMON NAME | SIZE | WATER USE | HEIGHT | SPREAD |
|---|---|---|---|---|---|---|---|
| | 39 | PISTACIA CHINENSIS | CHINESE PISTACHE | 36" BOX | L | 30'-40' | 30'-40' |
| | | CHILOPSIS LINEARIS | DESERT WILLOW | 36" BOX | VL | 15'-30' | 10'-2O' |

**ORNAMENTAL TREE**

| SYM. | QTY. | SCIENTIFIC NAME | COMMON NAME | SIZE | WATER USE | HEIGHT | SPREAD |
|---|---|---|---|---|---|---|---|
| | 20 | LAGERSTROEMIA SPP., HYBRID | CRAPE MYRTLE | 36" BOX | L | 6'-30' | 6'-15' |
| | | ARBUTUS UNEDO | STRAWBERRY TREE | 36" BOX | L | 10'-20' | 10'-20' |
| | | CERCIS OCCIDENTALIS | WESTERN REDBUD | 36" BOX | VL | 10'-20' | 8'-12' |
| | | PARKINSONIA 'DESERT MUSEUM' | DESERT MUSEUM PALO VERDE | 36" BOX | VL | 20'-35' | 20'-35' |

**PALM TREE**

| SYM. | QTY. | SCIENTIFIC NAME | COMMON NAME | SIZE | WATER USE | HEIGHT | SPREAD |
|---|---|---|---|---|---|---|---|
| | 51 | WASHINGTONIA ROBUSTA | MEXICAN FAN PALM | 36" BOX | M | 70'-100' | 8'-10' |
| | | PHOENIX CANARIENSIS | CANARY ISLAND DATE PALM | 36" BOX | L | 40'-60' | 20'-40' |

## SHRUBS AND GROUNDCOVER

**NATIVE GRASSES**

| SYM. | QTY. | SCIENTIFIC NAME | COMMON NAME | SIZE | WATER USE | HEIGHT | SPREAD |
|---|---|---|---|---|---|---|---|
| | 114,025 SQFT | ARCTOSTAPYLOS 'EMERALD CARPET | CARPET MANZANITA | 5 GAL | VL | 1' | 3'-6' |
| | | ROSMARINUS OFFICINALIS | ROSEMARY | 5 GAL | L | 1' | 3'-6' |
| | | LOMANDRA LONGIFOLIA 'LOMLON' | LIME TUFF DWARF MAT RUSH | 5 GAL | L | 3' | 3' |
| | | MUHLENBERGIA RIGENS | DEER GRASS | 5 GAL | L | 3' | 3' |

**PLAZA**

| SYM. | QTY. | SCIENTIFIC NAME | COMMON NAME | SIZE | WATER USE | HEIGHT | SPREAD |
|---|---|---|---|---|---|---|---|
| | 15,550 SQFT | AGAVE AMERICANA | AGAVE | 5 GAL | VL | 1'-4' | 1'-4' |
| | | FESTUCA GLAUCA | BLUE FESCUE | 5 GAL | L | 2' | 2' |
| | | LAVANDULA STOECHAS | SPANISH LAVENDER | 5 GAL | VL | 1'-4' | 2'-5' |
| | | PHORMIUM TENAX | NEW ZEALAND FLAX | 5 GAL | L | 6'-8' | 6'-8' |
| | | BOUTELOUA GRACILIS | BLUE GRAMA | 5 GAL | L | 2' | 2' |
| | | HELICTOTRICHON SEMPERVIRENS | BLUE OAT GRASS | 5 GAL | L | 2' | 2' |
| | | ANIGOZANTHOS FLAVIDUS | KANGAROO PAW | 5 GAL | L | 2'-3' | 2'-6' |
| | | ALOE 'BLUE ELF' | BLUE ELF ALOE | 5 GAL | L | 2' | 2' |

**STREETSCAPE + PARKING LOT**

| SYM. | QTY. | SCIENTIFIC NAME | COMMON NAME | SIZE | WATER USE | HEIGHT | SPREAD |
|---|---|---|---|---|---|---|---|
| | 296,788 SQFT | CISTUS SPP. | ROCKROSE | 5 GAL | L | 4'-6' | 4'-6' |
| | | JUNIPERUS CHINENSIS GOLD COAST | GOLD COAST JUNIPER | 5 GAL | L | 3'-4' | 3'-4' |
| | | NERIUM OLEANDER | OLEANDER | 5 GAL | L | 6'-10' | 8'-15' |

**STORMWATER**

| SYM. | QTY. | SCIENTIFIC NAME | COMMON NAME | SIZE | WATER USE | HEIGHT | SPREAD |
|---|---|---|---|---|---|---|---|
| | 50,142 SQFT | CHONDROPETALUM TECTORUM | CAPE REED | 5 GAL | L | 3'-4' | 3'-4' |
| | | IRIS DOUGLASIANA | DOUGLAS IRIS | 5 GAL | L | 1'-2' | 2'-3' |
| | | ROSA CALIFORNICA | CALIFORNIA WILD ROSE | 5 GAL | L | 1'-2' | 1'-2' |

2 PLANTING SCHEDULE

KAISER PERMANENTE®

**FOLSOM MOB**

285 Palladio Pkwy,
Folsom, CA 95630

**SMITHGROUP**

550 SOUTH HOPE STREET
SUITE 1950
LOS ANGELES, CA 90071
213.228.6900
smithgroup.com

| ISSUED FOR | REV | DATE |
|---|---|---|
| ENTITLEMENTS | | 9/26/2022 |

SEALS AND SIGNATURES

NOT FOR CONSTRUCTION

SHEET TITLE
PLANTING DETAILS

PROJECT NUMBER
13931.000

SHEET NUMBER
L8.0.2

Plot Date:

## SHRUB SUBSURFACE DRIP IRRIGATION

| SYMBOL | MFR. | MODEL NO. / DESCRIPTION | PSI | DETAIL |
|---|---|---|---|---|
| | NETAFIM | SHRUB PLANTING AREAS-GROUND LEVEL: LINES SHOWN ARE A DIAGRAMMATIC HATCH PATTERN ONLY. SUB-SURFACE DRIP TUBING WITH CHECK VALVE, MODEL TLHCVXR5-18 W/ .53 GPH EMITTERS, 18" ON CENTER. INSTALL TUBING ROWS MAXIMUM OF 16" APART IN SHRUB AREAS. FOR LARGE SLOPES, INSTALL PARALLEL TO SLOPE AT ALL TIMES. CONTRACTOR SHALL DETERMINE ACTUAL ROW SPACING IN THE FIELD AFTER REVIEW OF PLANT SPACING FOR EACH PLANTER. EACH AND EVERY SHRUB SHALL RECEIVE WATER FROM A MINIMUM OF TWO INLINE EMITTERS. AREAS OF TIGHTLY SPACED GROUNDCOVER WILL REQUIRE CLOSER ROW SPACING. FOR ANY 'SINGLE' OR' DOUBLE' ROW TYPE PLANTINGS, INSTALL DRIP TUBING ON BOTH SIDES OF THE SHRUB ROW TO IRRIGATE SHRUBS ON EACH SIDE. ALL TUBING SHALL BE INSTALLED 6" BELOW FINISH SOIL GRADE ANCHORED WITH RAIN BIRD 9" GALVANIZED WIRE STAKES, MODEL TDS-050, INSTALLED FOUR FEET O.C. (JUTE MESH OR OTHER STEEL 'U' STAKES SHALL NOT BE USED OR INSTALLED AT ANY TIME). CONTRACTOR SHALL FIELD VERIFY PRIOR TO STARTING WORK AND BEFORE BACKFILLING THAT FINAL LAYOUT AND SPACING WILL PROVIDE ADEQUATE WATER TO ALL PLANTS. CONTACT NETAFIM REPRESENTATIVE, ALLISTER COONEY, (951) 587-7007 FOR ADDITIONAL INFORMATION. | 40 | L9.2.5/A,B; L9.2.6/A,B,C,E; L9.2.7/A; L9.2.8/B,F |
| NO SYMBOL | RAIN BIRD | CONNECTION FITTINGS BETWEEN PVC LATERAL LINES AND DRIPLINE TUBING FOR CENTER FEED SYSTEMS: RAIN BIRD XFD-TFA-075, MDCFEL, MDCFTEE W/ MDCF75FPT, OR XXF-TMA-0F0 WITH 1/2" TT COUPLER. CONNECTION FITTINGS BETWEEN PVC SUPPLY OR EXHAUST HEADER PIPE AND DRIPLINE TUBING: RAIN BIRD XFF-MA-075 / XFF-MA-050 BARB MALE ADAPTER. | 40 | L9.2.6/A,B,C,E; L9.2.7/B,C; L9.2.8/C |
| NO SYMBOL | RAIN BIRD | ALL CONNECTIONS BETWEEN 1/2" DRIPLINE TUBING SHALL BE MADE USING RAIN BIRD XFF INSERT FITTINGS AND XF INSERT CROSS FITTING. | 40 | L9.2.6/A,B,C,E; L9.2.7/B,C; L9.2.8/B |
| NO SYMBOL | RAIN BIRD | ALTERNATE DRIPLINE MANIFOLD SETUP: CONTRACTOR MAY USE RAIN BIRD'S COILED POLY DRIPLINE 'QF' HEADER (18" OR 12" ROW SPACING AS REQUIRED) FOR ALL DRIP ZONE HEADERS AND FOOTERS AS NEEDED. USE 3/4" PRODUCT FOR AREA FLOWS UP TO 5 GPM. FOR 18" EMITTER SPACING USE MODEL XQF07518100, FOR 12" EMITTER SPACING USE MODEL XQF07512100. USE 1" PRODUCT FOR AREA FLOWS 6 GPM TO 15 GPM. FOR 18" EMITTER SPACING USE MODEL XQF1018100, FOR 12" EMITTER SPACING USE MODEL XQF1012100 . NO TIGHT BENDING OF QF DRIPLINE HEADER IS ALLOWED. RECOMMENDED INSERT FITTINGS: SPEARS 90 ELL INSERT X INSERT (3/4" 1406-007) / (1" 1406-010); MALE ADAPTER MIPT X INSERT (3/4" 1436-007) / (1" 1436-010); COUPLING INSERT X INSERT (3/4" 1429-007) / (1" 1429-010); INSERT ADAPTER INSERT X SOC (3/4" 474-007) / (1" 474-010); INSERT ADAPTER INSERT X SPIGOT (3/4" 460-007) / (1" 460-010) FOR USE WITH PVC SOC FITTINGS; TEE INSERT X INSERT X SOC (3/4" 1404-102) / (1" 1404-010). | | L9.2.5/A,B; L9.2.8/F |

*NOTE: THE IDEAL STAINLESS STEEL CLAMP (MURRAY OR OETIKER TYPE) IS REQUIRED ON ALL INSERT FITTING CONNECTIONS.

A. FOR ALL AREAS INSTALL PERIMETER TUBING MAXIMUM 9" FROM PERIMETER EDGE FOR GROUNDCOVER AREAS OR AT FIRST LINE OF SHRUBS. INSTALL PARALLEL TO SLOPE AT ALL TIMES. CONTRACTOR SHALL DETERMINE MINIMUM ROW SPACING IN THE FIELD AFTER REVIEW OF PLANT SPACING FOR EACH PLANTER. EACH AND EVERY SHRUB SHALL RECEIVE WATER FROM A MINIMUM OF TWO INLINE EMITTERS. AREAS OF TIGHTLY SPACED GROUNDCOVER WILL REQUIRE CLOSER ROW SPACING. FOR ANY 'SINGLE' OR' DOUBLE' ROW TYPE PLANTINGS, INSTALL DRIP TUBING ON BOTH SIDES OF THE SHRUB ROW TO IRRIGATE SHRUBS ON EITHER SIDE. DUE TO SOIL STRATA DIFFERENCES AND POSSIBLE COMPACTION CONTRACTOR SHALL FIELD VERIFY PRIOR TO STARTING WORK AND BEFORE BACKFILLING THAT THE FINAL LAYOUT AND ROW SPACING WILL PROVIDE ADEQUATE WATER TO ALL PLANTS.

B. CONTRACTOR SHALL ALWAYS FOLLOW AND ROUTE, PARALLEL TO GRADE, ANY INLINE DRIP TUBING LAYOUT. ALWAYS LAY DRIPLINES PERPENDICULAR TO SLOPE. DO NOT FOLLOW DIRECTIONAL LAYOUT AS SHOWN IN THE PLANS. HATCH PATTERNS SHOWN IN PLAN'S DRIP AREAS ARE DIAGRAMMATICAL ONLY.

C. FOR ALL INLINE DRIP TUBING AREAS ON SLOPE THE CONTRACTOR SHALL BE HELD ACCOUNTABLE FOR CREATING A TRIANGULAR WETTING PATTERN ACROSS ANY SLOPE. OFFSET THE EMITTERS BY HALF THE EMITTER SPACING WHEN INSTALLING TUBING TO CREATE A TRIANGULAR WETTING PATTERN ACROSS THE SLOPE. DO NOT INSTALL TUBING WHERE THE EMITTERS ARE DIRECTLY IN LINE (PERPENDICULAR) WITH EACH OTHER.

| | | | | |
|---|---|---|---|---|
| F | SPEARS | FLUSH VALVE ASSEMBLY: PROVIDE GRAY 1/2" PVC THREADED BALL VALVE, MODEL 2621-005G, WITH CHAMPION IRRIGATION PRODUCTS (ARROWHEAD BRASS) BRASS HOSE-TO-PIPE THREAD INSERT ADAPTER, MODEL #10F, FOR FLUSHING PVC PIPE WITH STANDARD GARDEN HOSE, INSTALL FLUSH VALVE INSIDE 7" ROUND VALVE BOX, ONE AT THE END OF EACH AND EVERY PIPE RUN IN EACH DIRECTION. MULTIPLE FLUSH VALVES MAY BE REQUIRED WITHIN DRIP ZONE. CONTRACTOR SHALL BE RESPONSIBLE FOR ALL FLUSH VALVES REQUIRED. WHEN POSSIBLE INSTALL VALVE 18" FROM PAVING FOR EASE OF MAINTENANCE. | | L9.2.5/A,B; L9.2.6/A,B,C,D,E; L9.2.8/F |
| NO SYMBOL | HUNTER | ECO-ID: SPRINKLER BODY WITH VISIBLE YELLOW STEM INDICATES ZONE IS IN OPERATION. INSTALL ONE UNIT WITHIN EACH AND EVERY PLANTER WITHIN A ZONE. FOR TREE ZONES INSTALL AT END OF ZONE RUN IN EACH DIRECTION. ATTACH TO POLY OR PVC VIA 1/2" MPT CONNECTION. INSTALL UNIT AT HIGH POINT OF EACH PLANTER OR USE HUNTER'S MANUALLY INSTALLED CHECK VALVE P/N 462237SP. | | L9.2.2/E; L9.2.5/A,B; L9.2.6/A,B,C,E |
| NO SYMBOL | NETAFIM | AIR RELIEF VALVE, MODEL TLAVRV, FOR DRIPLINE SYSTEMS. INSTALL MINIMUM OF ONE UNIT WITHIN EACH AND EVERY PLANTER WITHIN A ZONE. INSTALL UNIT AT ALL HIGH POINTS OF EACH PLANTER. ATTACH TO POLY TUBING VIA INSERT FITTINGS OR PVC HEADER/FOOTER PIPE VIA PVC FITTINGS. CONTRACTOR SHALL REVIEW DRIP ZONE AREA AND LAYOUT TO DETERMINE EXACT LOCATIONS AND QUANTITY OF ARV'S TO INSTALL IN DRIP ZONE. | | L9.2.5/A,B; L9.2.6/A,B,C,E; L9.2.8/D,E,F |

## POINT SOURCE DRIP IRRIGATION

| | | | PSI | |
|---|---|---|---|---|
| — PD — | RAIN BIRD | SHRUBS; INSTALL ONE (1) OR TWO (2) XB-(10)(20)-1032 SERIES EMISSION DEVICES DIRECTLY ADJACENT TO EDGE OF ROOTBALL. INSTALL ON RAIN BIRDPFR/FRA12/ OR FRA/24 PRE-ASSEMBLED POLYFLEX RISER ADAPTER. CUT RISER TO 2" ABOVE MULCH LAYER. ALWAYS INSTALL ON UPHILL SIDE OF SHRUB. GRAVITY FLOW SHALL TRAVEL THROUGH MIDDLE OF ROOTBALL. | 40 | L9.2.9/B,C,E |

| SHRUB DRIP EMITTER TABLE | |
|---|---|
| PLANT SIZE | # OF EMITTERS |
| 1 GALLON SHRUB | 1 - 2 GPH |
| 5 GALLON SHRUB | 1 - 2 GPH |
| 15 GALLON SHRUB | 2 - 2 GPH |

| | | | | |
|---|---|---|---|---|
| F | SPEARS | FLUSH VALVE ASSEMBLY: PROVIDE GRAY 1/2" PVC THREADED BALL VALVE, MODEL 2621-005G, WITH CHAMPION IRRIGATION PRODUCTS (ARROWHEAD BRASS) BRASS HOSE-TO-PIPE THREAD INSERT ADAPTER, MODEL #10F, FOR FLUSHING PVC EXHAUST MANIFOLD PIPE WITH STANDARD GARDEN HOSE. INSTALL FLUSH VALVE INSIDE 7" ROUND VALVE BOX, ONE AT THE END OF EACH AND EVERY PIPE RUN IN EACH DIRECTION. MULTIPLE FLUSH VALVES MAY BE REQUIRED WITHIN DRIP ZONE. CONTRACTOR SHALL BE RESPONSIBLE FOR ALL FLUSH VALVES REQUIRED, AS PLANS MAY NOT SHOW ALL FLUSH VALVES REQUIRED FOR A PARTICULAR AREA. INSTALL FINAL LOCATION 18" FROM PAVING FOR EASE OF MAINTENANCE. | | L9.2.6/D; L9.2.9/E |
| NO SYMBOL | HUNTER | ECO-ID: SPRINKLER BODY WITH VISIBLE YELLOW STEM INDICATES ZONE IS IN OPERATION. INSTALL ONE UNIT WITHIN EACH AND EVERY PLANTER WITHIN A ZONE. FOR TREE ZONES INSTALL AT END OF ZONE RUN IN EACH DIRECTION. ATTACH TO POLY OR PVC VIA 1/2" MPT CONNECTION. INSTALL UNIT AT HIGH POINT OF EACH PLANTER OR USE HUNTER'S MANUALLY INSTALLED CHECK VALVE P/N 462237SP. | | L9.2.2/E; L9.2.9/E |

## IRRIGATION VALVE IDENTIFICATION

xxxxsq.ft. = AREA OF INLINE DRIP ZONE IN SQUARE FEET
TREES = TREE DRIP SYSTEMS
Pt. Src. = POINT SOURCE DRIP SYSTEMS
Flowers = MICROSPRAY SYSTEMS
SLOPE = HANGING DRIP SYSTEMS ON SLOPE

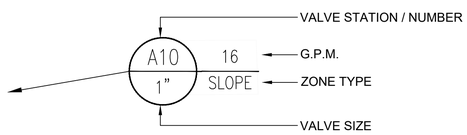


## IRRIGATION CONTROLLER AND RELATED EQUIPMENT

| SYMBOL | MFR. | MODEL NO. / DESCRIPTION | DETAIL |
|---|---|---|---|
| A | SITE ONE | PEDESTAL CONTROLLER ASSEMBLY: (A) SA1-WT5-H2O96/ETECXL+OFS96-5Y/GTF3-150-ER-NC/RSE/WT2W-H2OSA-*9*/ PED18SS/EMP18/EV-CAB-*SEN-100'*/WT2W-H2O1*VD-91*/GRP-3-9/GRPA/CAB-14-Y(CONTRACTOR SHALL SUBMIT QUALITY TO SITEONE DURING ORDER) ASSEMBLY TO INCLUDE ONE 96 STATION CONTROLLER WITH ONE 1.5" HYDROMETER, FLOW MANAGEMENT KEY, V.I.T. MOUNTING PAD, 12" PEDESTAL EXTENSION AND FIVE YEAR CELLULAR PLAN. ASSEMBLY 'A' WITH 91 *DECODERS, 9 DECODER SURGE PROTECTION KITS, 100' OF FLOW SENSOR CABLE, 9 SURGE DECODER GROUNDING KIT, AND 1 CONTROLLER GROUNDING KIT*. CONTRACTOR SHALL SET UP CELLULAR MODEM WITH 5-YR CELLULAR PLAN FOR WEATHERTRAC WEB-BASED 'DATA SERVICE PLAN' CENTRAL INTERNET MANAGEMENT. CONTROLLER PEDESTAL SHALL BE MOUNTED ON A V.I.T. 'QUICKPAD' BASE. CONTRACTOR SHALL BE RESPONSIBLE FOR THE CONTROLLER SET UP REQUIREMENTS TO OPERATE THE CENTRAL CONTROL DATA TRANSFER USING CELLULAR PHONE SERVICE. CONTRACTOR SHALL ASSIST OWNER WITH THE WEATHERTRAC 2 DOWNLOADABLE SOFTWARE APP FOR MOBILE PHONE. CONTRACTOR SHALL VERIFY EXACT CONTROLLER LOCATION WITH OWNER'S AUTHORIZED REPRESENTATIVE BEFORE INSTALLATION. VERIFY ROUTING OF ELECTRICAL CONDUCTORS WITHIN CONDUIT TO THE CONTROLLER LOCATION WITH THE ELECTRICAL CONTRACTOR. DUE TO THE PROPOSED LOCATION OF THE CONTROLLER, IT SHALL BE THE RESPONSIBILITY OF THE CONTRACTOR TO PROVIDE ANY ADDITIONAL EQUIPMENT AS MAY BE NECESSARY FOR THE OPERATION OF WEB-BASED SOFTWARE PROGRAMMING WITHOUT COMPLICATION. CONTACT SITE-ONE REPRESENTATIVE ERIK ANDERSON, (949) 285-4048, FOR ASSEMBLY ORDERING AND PROGRAMMING. ALSO FOR PROGRAMMING AND OPERATION OF THE WEATHERTRAC 'OPTI-F' FLOW MANAGEMENT FEATURE, REQUIRED FOR FLOW ZONES SEPARATION. | L9.2.3/B |
| NO SYMBOL | SITEONE | V.I.T. 'QUICK-PAD' CONTROLLER PEDESTAL MOUNTING PAD, MODEL EMP-18, AS PART OF CONTROLLER ASSEMBLY PACKAGE. | L9.2.3/B |
| RS | SITE ONE | WIRED RAIN SENSOR, AS PART CONTROLLER ASSEMBLY PACKAGE. | L9.2.3/B |
| NO SYMBOL | SITE ONE | ETEC-5YR WEATHERTRAK ET EVERYWHERE WEATHER UPDATE SERVICE (FIVE-YEAR SERVICE SUBSCRIPTION), AS PART OF EACH CONTROLLER ASSEMBLY PACKAGE. AFTER ACTIVATION CONTRACTOR SHALL TURN OVER TO OWNER'S AUTHORIZED REPRESENTATIVE ALL PAPERWORK, DOCUMENTS, ACCESS CODES, ETC. | N/A |
| NO SYMBOL | SITE ONE | CONTROLLER CERTIFICATION; SITE ONE TECHNICIAN SHALL REVIEW CONTROLLER AND HYDROMETER INSTALLATION. ALSO SHALL REVIEW AND CONFIRM AS PART OF EACH CONTROLLER ASSEMBLY PACKAGE. AFTER ACTIVATION CONTRACTOR SHALL TURN OVER TO OWNER'S AUTHORIZED REPRESENTATIVE ALL PAPERWORK, DOCUMENTS, ACCESS CODES, ETC. | N/A |
| NO SYMBOL | SITEONE | SINGLE RCV DECODER: MODEL WT2W-H2O1*VD*. INSTALL AT RCV LOCATIONS. CONNECT TO CONTROLLER VIA 2-WIRE CABLE. LINE SURGE PROTECTION DECODER: MODEL WT2W-H2OSA, CONNECT TO 2-WIRE CABLE. SEE SYSTEM SURGE PROTECTION GROUNDING. | L9.2.9/A,D; L9.2.10/A,B,C,E,F |
| NO SYMBOL | SITE ONE | 2-WIRE DECODER CABLE, MODEL CAB-14-Y; #14 GAUGE AS PART OF CONTROLLER ASSEMBLY. INSTALL ALL CABLE WITHIN 1-1/4" ELECTRICAL CONDUIT. CONNECT TO CONTROLLER PER MANUFACTURER'S SPECIFICATIONS. | L9.2.9/A,D; L9.2.10/A,B,C,D,F |
| S | AS APRVD | 2-WIRE DECODER CABLE GROUNDING: CONTRACTOR SHALL GROUND PER MANUFACTURER'S SPECIFICATIONS, BUT NOT LESS THAN PER LOCAL AND NATIONAL ELECTRICAL CODE. USE SYSTEM SURGE PROTECTION AT A MAXIMUM OF 450-475 FEET APART ALONG ENTIRE LENGTH OF 2-WIRE CABLE, AT THE ENDS OF THE 2-WIRE CABLE RUN AND AT THE END OF ANY CABLE RUN OFF-SHOOT LEG LONGER THAN 50' FROM MAIN 2-WIRE CABLE RUN. SEE PLAN FOR APPROXIMATE LOCATIONS. CONTACT SITEONE REPRESENTATIVE ERIC ANDERSON, (949) 285-4048, FOR ADDITIONAL INFORMATION. GROUND WIRE TO GROUND ROD/PLATE CONNECTION SHALL BE BY CADWELD 'ONE-SHOT' PROCESS ONLY. USE OF GROUNDING CLAMPS IS NOT AN ACCEPTABLE INSTALLATION. MAXIMUM RESISTANCE SHALL BE NO MORE THAN 10 OHMS. CONTRACTOR SHALL PROVIDE PROOF OF MEASURED RESISTANCE TO OWNER'S AUTHORIZED REPRESENTATIVE BEFORE MAINTENANCE PERIOD BEGINS. | L9.2.9/A,D; L9.2.10/B,D,F |
| NO SYMBOL | AS APRVD | CONTROLLER GROUNDING: CONTRACTOR SHALL GROUND CONTROLLER PER MANUFACTURER'S SPECIFICATIONS, BUT NOT LESS THAN PER LOCAL AND NATIONAL ELECTRICAL CODE. GROUND WIRE/ROD CONNECTION SHALL BE BY CADWELD PROCESS ONLY, CLAMPS ARE NOT AN ACCEPTABLE SUBSTITUTE. MAXIMUM RESISTANCE SHALL BE 10 OHMS OR LESS. CONTRACTOR SHALL PROVIDE PROOF OF MEASURED RESISTANCE TO OWNER'S AUTHORIZED REPRESENTATIVE BEFORE MAINTENANCE PERIOD BEGINS AND INCLUDE DOCUMENT WITHIN SUBMITTED OPERATIONS AND MAINTENANCE MANUAL. | L9.2.3/B,D |
| NO SYMBOL | SITEONE | CONTROLLER GROUNDING EQUIPMENT SHALL INCLUDE: MODEL GRPA; ONE GROUND PLATE 4"X36", AND ONE GROUND ROD 5/8"X8' (WITH CADWELD) AND TWO BAGS OF GROUND ENHANCEMENT EARTH CONTACT BACKFILL MATERIAL (HARDENING) AMOUNT AS NEEDED TO COMPLETELY ENCASE PLATE AND ROD, CADWELD 'ONE-SHOT' CONNECTION SYSTEM FOR ROD AND WIRE. DECODER GROUNDING EQUIPMENT: MODEL GRP-3; ONE GROUND PLATE 4"X36" (WITH CADWELD) AND ONE BAG OF GROUND ENHANCEMENT EARTH CONTACT BACKFILL MATERIAL (HARDENING) AMOUNT AS NEEDED TO COMPLETELY ENCASE PLATE. CADWELD 'ONE-SHOT' CONNECTION SYSTEM FOR ROD AND WIRE. | L9.2.3/B,D |
| NO SYMBOL | RAIN BIRD | PULL BOX, STANDARD RECTANGULAR SIZE, MODEL VB-STD, FOR ALL 2-WIRE CABLE SPLICES AND LOCATE AT TWO HUNDRED LINEAR FEET (200') ALONG CABLE ROUTE WHEN RCV BOX IS NOT AVAILABLE. ALSO AT ALL CABLE ROUTING CHANGE-OF-DIRECTION. LOOP 2-WIRE CABLE MIN. 36" TO PULL OUTSIDE OF BOX. LABEL LID '2W CABLE'. | L9.2.4/B |
| EL | BY OTHERS | 117 VOLT ELECTRICAL POWER, PROVIDED BY ELECTRICIAN. CONTRACTOR SHALL COORDINATE AND VERIFY CONTROLLER PEDESTAL LOCATION IN FIELD WITH ELECTRICIAN. ELECTRICIAN SHALL ROUTE AND INSTALL ALL CONDUIT AND CONDUCTORS TO WITHIN THE CONTROLLER PEDESTAL LOCATION. IRRIGATION CONTRACTOR SHALL CONNECT IRRIGATION CONTROLLER TO ELECTRICAL STUB-OUT. CONTROLLER CIRCUIT SHALL BE SUPPLIED BY A DEDICATED BREAKER FROM THE POWER SOURCE. | N/A |
| NO SYMBOL | N/A | DUE TO POSSIBLE UNFORESEEN CHANGES IN THE FIELD IT SHALL BE THE RESPONSIBILITY OF THE CONTRACTOR TO COORDINATE ALL CONDUITS, SLEEVES, AND WIRE ROUTING WITH GENERAL CONTRACTOR AND ANY AFFECTED ON-SITE TRADES AS REQUIRED THROUGHOUT PROJECT. | N/A |

## IRRIGATION FERTIGATION ASSEMBLY

| | | | |
|---|---|---|---|
| | EZO FLO | AUTOMATIC FERTILIZER INJECTOR SYSTEM, MODEL EZ-010-FX (10 GALLON CAPACITY)...INSTALL PER MANUFACTURERS RECOMMENDATIONS WITH EZ FLOW MAINLINE CONNECTOR FITTING, MODEL CBV-X00 REQUIRED FOR CONNECTION TO MAINLINE WITHIN A MAXI-JUMBO VALVE BOX, MODEL VB-MAXH WITH LID.<br><br>CONTACT EZ FLO MANUFACTURER'S REPRESENTATIVE, STEVE KIM, GENTILE & ASSOCIATES, (760) 214-5734 FOR SALES, INSTALLATION, AND CALIBRATION INFORMATION. CONTRACTOR SHALL CALIBRATE UNIT TO PROVIDE OPTIMAL FERTILIZATION BASED ON WATERING FREQUENCY. FOR FUTURE MAINTENANCE INCLUDING DESIRED FILL FREQUENCY, THE PREFERRED SETTING SHALL BE 8000:1 RATIO. CONTRACTOR SHALL BE RESPONSIBLE FOR THE PROPER SOLUBLE FERTILIZER N-P-K RATIO TO BE USED FOR TURFGRASS AND SHRUBS BASED ON INFORMATION GIVEN FROM THE EZ FLO REPRESENTATIVE. | L9.2.7/D,E |

KAISER PERMANENTE®

**FOLSOM MOB**
285 Palladio Pkwy,
Folsom, CA 95630


**SMITHGROUP**
550 SOUTH HOPE STREET
SUITE 1950
LOS ANGELES, CA 90071
213.228.6900
smithgroup.com


| ISSUED FOR | REV | DATE |
|---|---|---|
| ENTITLEMENTS | | 9/26/2022 |

SEALS AND SIGNATURES

NOT FOR CONSTRUCTION

SHEET TITLE
IRRIGATION LEGEND

PROJECT NUMBER 13931.000

SHEET NUMBER L9.0.0

Plot Date:

## IRRIGATION PIPE/SLEEVE

| SYMBOL | MFR. | MODEL NO. / DESCRIPTION | DETAIL |
|---|---|---|---|
| ———— | AS APRVD | PVC PIPE, SCH 40, 3/4" - 2", AS LATERAL LINES. 12" BELOW GRADE. SEE PLAN FOR SIZES | L9.2.1/D |
| NO SYMBOL | N/A | -DRIP MANIFOLD PIPE (HEADER/FOOTER): PVC PIPE, SCH 40. 12" BELOW GRADE.<br>MINIMUM (HEADER/FOOTER) SIZES FOR DRIP ZONES USING TUBING WITH 18" O.C. EMITTER SPACING :<br>USE 3/4" PIPE: UP TO 800' TOTAL SQ. FT. WITHIN ZONE, FOR INDIVIDUAL OR CONNECTED PLANTERS. (4 GPM MAX)<br>USE 1" PIPE: 801'-1450' TOTAL SQ. FT. WITHIN ZONE, FOR INDIVIDUAL OR CONNECTED PLANTERS. (7 GPM MAX)<br>USE 1-1/4" PIPE: 1451'-3100' TOTAL SQ. FT. WITHIN A ZONE, FOR INDIVIDUAL OR CONNECTED PLANTERS. (15 GPM MAX)<br>USE 1-1/2" PIPE: 3101'-4100' TOTAL SQ. FT. WITHIN A ZONE, FOR INDIVIDUAL OR CONNECTED PLANTERS. (20 GPM MAX)<br>USE 2" PIPE: 4101'-6200' TOTAL SQ. FT. WITHIN A ZONE, FOR INDIVIDUAL OR CONNECTED PLANTERS. (29 GPM MAX) | L9.2.1/D;<br>L9.2.6/A,B,C,E |
| NO SYMBOL | AS APRVD | RAIN BIRD 'QF' DRIPLINE TUBING FOR DRIPLINE ZONES HEADER/FOOTER. MAY BE SUBSTITUTED FOR PVC PIPE, BURY 8" BELOW GRADE. | L9.2.5/A,B |
| — · · —●— | N/A | PVC LATERAL PIPE CONNECTION TO DRIPLINE ZONE HEADER/FOOTER MANIFOLD PIPE. CONTRACTOR TO PROVIDE NECESSARY FITTINGS TO CONNECT PVC PIPE TO POLY HEADER/FOOTER MANIFOLD PIPE AS REQUIRED. | N/A |
| ———— | AS APRVD | PVC PIPE, SCH 40, 3/4" - 1-1/4", AS TREE ZONE LATERAL (THICK) LINES. 12" BELOW GRADE. SEE PLAN FOR SIZES. | L9.2.1/D |
| - - - - - | AS APRVD | PVC PIPE, SCH 40, 2" OR SMALLER, AS MAINLINES, 18" BELOW GRADE. SEE PLAN FOR SIZES.<br>PVC PIPE, CL250, BELL AND GASKET, 2-1/2"-3", AS MAINLINES, 18" (2-1/2") TO 24" (3") BELOW GRADE. SEE PLAN FOR SIZES.<br>USE LEEMCO JOINT RESTRAINTS, AS REQUIRED FOR ALL 'CHANGES OF DIRECTION', FOR 2-1/2" AND LARGER PIPE. | L9.2.1/D; L9.2.7/F |
| — PD — | AS APRVD | PVC PIPE, SCH 40, 1/2" - 11/2", AS BURIED LATERAL LINES FOR POINT SOURCE DRIP SYSTEMS. DEPTH SHALL BE MINIMUM OF 8" OF SOIL COVER (BELOW GRADE). SEE PLAN FOR SIZES. | L9.2.1/D; L9.2.9/E |
| — — — — | AS APRVD | PIPE AND WIRE SLEEVES, SCH 40 PVC PIPE, MINIMUM TWICE THE DIAMETER OF PIPE CARRIED AND MINIMUM 1-1/4" PIPE FOR WIRE CARRIED. PLACE BELOW ALL PAVING, SIDEWALKS, HARDSCAPE, ETC, AND AS DIRECTED BY OWNER'S AUTHORIZED REPRESENTATIVE. ALL SLEEVES NOT SHOWN ON PLAN FOR DRAWING CLARITY. 6" MAINLINE AND 3" WIRE SLEEVES AT ROAD CROSSINGS INSTALLED BY OTHERS. IRRIGATION CONTRACTOR SHALL VERIFY THE EXACT TERMINUS LOCATIONS, DEPTH, AND SIZES WITH GENERAL CONTRACTOR BEFORE COMMENCING WORK. | L9.2.1/D |

## IRRIGATION UTILITIES

| SYMBOL | MFR. | MODEL NO. / DESCRIPTION | DETAIL |
|---|---|---|---|
| M | P.O.C. | CONNECTION TO 2" POTABLE WATER METER WITH 2" SERVICE LINE. CONTRACTOR SHALL SUPPLY ALL HARDWARE AND FITTINGS REQUIRED TO CONNECT IRRIGATION MAINLINE TO METER. CONTRACTOR SHALL VERIFY METER LOCATION, SIZE, SERVICE LINE SIZE, AND STATIC WATER PRESSURE BEFORE COMMENCING WORK. | N/A |
| RP | FEBCO | 2" REDUCED PRESSURE BACKFLOW PREVENTION ASSEMBLY: MODEL 825YA, INSTALL WITH WYE STRAINER #650A. INSTALL CENTERED ON A 30"X36"X4" POURED-IN-PLACE CONCRETE PAD. UNIT TO BE INSTALLED WITHIN V.I.T. STAINLESS STEEL ENCLOSURE. CONTRACTOR SHALL DETERMINE EXACT LOCATION WITH THE OWNER'S AUTHORIZED REPRESENTATIVE BEFORE INSTALLATION. SEE PRESSURE CALCULATION. | L9.2.1/A |
| NO SYMBOL | V.I.T. | BACKFLOW ASSEMBLY ENCLOSURE: MODEL SBBC-22SS. INSTALL ON CONCRETE PAD WITH BF ASSEMBLY CENTERED. CONCRETE PAD TO EXTEND 6" BEYOND OUTSIDE DIMENSIONS OF ENCLOSURE. REFER TO MANUFACTURER'S INSTALLATION DETAIL AND SPECIFICATIONS FOR ADDITIONAL INSTALLATION INFORMATION. | L9.2.1/A |
| H | SITE ONE | 1-1/2" BRASS HYDROMETER AS PART OF THE CONTROLLER ASSEMBLY. CONNECT TO CONTROLLER VIA SEPARATE #14 GAUGE FLOW SENSOR CABLE, PAIGE ELECTRIC, MODEL 7072D, WITHIN 1-1/4" SCH 80 CONDUIT. | L9.2.2/A |
| ⋈ | LASCO | MAINLINE ISOLATION VALVE: MODEL VXX101N-SC. PVC SLO-CLOSE FULL BLOCK TRUE UNION 'SOCKET' BALL VALVE WITH EPDM O-RINGS. VALVE TO MATCH MAINLINE SIZE. | L9.2.1/F |
| NO SYMBOL | LASCO | MANIFOLD ISOLATION VALVE: SLO-CLOSE FULL BLOCK TRUE UNION 'SOCKET' PVC BALL VALVE WITH EPDM O-RINGS, MODEL VXX101N-SC. CONTRACTOR SHALL INSTALL ALL RCV'S/QCV'S ON MANIFOLDS. VALVE TO MATCH MANIFOLD SIZE. VALVE MANIFOLDS WITH ISOLATION VALVE ARE NOT SHOWN ON PLANS FOR CLARITY. CONTRACTOR SHALL INSTALL MANIFOLDS PER DETAIL. | L9.2.1/F; L9.2.2/B |
| ⊙ | HUNTER | 3/4" QUICK COUPLER VALVE: MODEL HQ-3RC. CONTRACTOR SHALL SUPPLY 3 QC KEYS, MODEL HK-33 WITH ARROWHEAD BRASS (CHAMPION) UPWARD 3/4"X 3/4" BENT-NOSE HOSE BIB, MODEL 975, ATTACHED. CONTRACTOR SHALL TURN OVER KEYS TO OWNER'S REPRESENTATIVE AT COMPLETION OF MAINTENANCE PERIOD. | L9.2.1/G; L9.2.2/B |
| ◪ | HUNTER/ NETAFIM | 1" DRIP ZONE ASSEMBLY: HUNTER RCV, MODEL ICV-101G ,WITH NETAFIM 1" DISC FILTER, MODEL DF100-140 (WITH 140 MESH DISC RINGS), AND 1" 40 PSI PRESSURE REGULATOR, MODEL WRPR1-40. INSTALL SPEARS 1" GRAY THREADED (FIPT) BALL VALVE, MODEL 2621-010G ON UPSTREAM SIDE OF VALVE FOR ISOLATION. | L9.2.2/B,D;<br>L9.2.4/B; L9.2.8/A |
| ◔ | HUNTER | REMOTE CONTROL VALVE ICV SERIES, SIZE AS SHOWN | L9.2.1/E; L9.2.2/B |
| AR | NETAFIM | CONTINUOUS ACTING COMBINATION 1" AIR VENT, MODEL 65ARIB1-0150. INSTALL ON MAINLINE WHERE SHOWN.<br>SYSTEM 'A' - 5 ASSEMBLIES; SYSTEM 'B' - 6 ASSEMBLIES<br>CONTRACTOR SHALL BE RESPONSIBLE FOR ALL FITTINGS AND HARDWARE TO CONNECT VALVE TO IRRIGATION MAINLINE. INSTALL WITHIN STACKING STANDARD VALVE BOXES, MODEL VB-STD OR USE 45 DEGREE ELS. INSTALL NIBCO BALL VALVE, MODEL T-585-70-66-ST, WITH STAINLESS STEEL STEM / NUT / BALL / HANDLE, FOR SHUTOFF FROM MAINLINE. CONTACT NETAFIM REPRESENTATIVE, BILL MILLWARD, (951) 287-4630, FOR ADDITIONAL EQUIPMENT INFORMATION. | L9.2.4/A |

## OVERHEAD IRRIGATION

| Q | H | F | | | 90° | GPM 180° | GPM 360° | RADIUS | P/R-HR. | PSI | |
|---|---|---|---|---|---|---|---|---|---|---|---|
| 1 | 2 | 3 | RAIN BIRD | RD-06-S-P45-F W/ R-VAN14 ROTARY (Q,H) (F-360°) NOZZLE | 0.32 | 0.63 | 1.27 | 8-14 FT | .62" | 45 | L9.2.3/A |
| 4 | 5 | 6 | RAIN BIRD | RD-06-S-P45-F W/ R-VAN18 ROTARY (Q,H) (F-360°) NOZZLE | 0.50 | 1.01 | 1.85 | 13-18 FT | .64" | 45 | L9.2.3/A |
| 7 | 8 | 9 | RAIN BIRD | RD-06-S-P45-F W/ R-VAN24 ROTARY (Q,H) (F-360°) NOZZLE | 0.84 | 1.68 | 3.48 | 17-24 FT | .61" | 45 | L9.2.3/A |
| LS 10 | RS 11 | SS 12 | RAIN BIRD | RD-06-S-P45-F W/ R-VAN STRIP (LCS/RCS, SST) ROTARY NOZZLE | 0.24 | 0.48 | | 15 FT | .62" | 45 | L9.2.3/A |
| 1 | 2 | 3 | RAIN BIRD | RD-12-S-P45-F W/ R-VAN14 ROTARY (Q,H) (F-360°) NOZZLE | 0.32 | 0.63 | 1.27 | 8-14 FT | .62" | 45 | L9.2.3/A |
| 4 | 5 | 6 | RAIN BIRD | RD-12-S-P45-F W/ R-VAN18 ROTARY (Q,H) (F-360°) NOZZLE | 0.50 | 1.01 | 1.85 | 13-18 FT | .64" | 45 | L9.2.3/A |
| 7 | 8 | 9 | RAIN BIRD | RD-12-S-P45-F W/ R-VAN24 ROTARY (Q,H) (F-360°) NOZZLE | 0.84 | 1.68 | 3.48 | 17-24 FT | .61" | 45 | L9.2.3/A |
| LS 10 | RS 11 | SS 12 | RAIN BIRD | RD-12-S-P45-F W/ R-VAN STRIP (LCS/RCS, SST) ROTARY NOZZLE | 0.24 | 0.48 | | 15 FT | .62" | 45 | L9.2.3/A |
| | | | RAIN BIRD | RD-06-S-P30-F W/ 5' SERIES NOZZLE (Q, H) | 0.10 | 0.20 | | 3-5 FT | 1.54" | 30 | L9.2.3/A |
| | | | RAIN BIRD | RD-06-S-P30-F W/ 8' HE-VAN SERIES NOZZLE (Q, H, F) | 0.29 | 0.59 | 1.17 | 6-8 FT | 1.76" | 30 | L9.2.3/A |
| | | | RAIN BIRD | RD-06-S-P30-F W/ 10' HE-VAN SERIES NOZZLE (Q, H, F) | 0.45 | 0.89 | 1.78 | 8-10 FT | 1.72" | 30 | L9.2.3/A |
| | | | RAIN BIRD | RD-06-S-P30-F W/ 12' HE-VAN SERIES NOZZLE (Q, H, F) | 0.59 | 1.18 | 2.37 | 10-12 FT | 1.58" | 30 | L9.2.3/A |
| | | | RAIN BIRD | RD-06-S-P30-F W/ 15' HE-VAN SERIES NOZZLE (Q, H, F) | 0.93 | 1.85 | 3.70 | 12-15 FT | 1.58" | 30 | L9.2.3/A |
| | | | RAIN BIRD | RD-06-S-P30-F W/ 15RCS / 15LCS / 15SST NOZZLE | 0.49 | 0.49 | 1.21 | R/LCS 4X12 FT<br>SST 4X25 FT | 1.58" | 30 | L9.2.3/A |

## IRRIGATION MISCELLANEOUS

| SYMBOL | MFR. | MODEL NO. / DESCRIPTION | DETAIL |
|---|---|---|---|
| NO SYMBOL | SPEARS | PVC FITTINGS/NIPPLES: 1.) REQUIRED FOR ALL SOLVENT WELD MAINLINE FITTINGS, 2" AND SMALLER: USE SPEARS PVC CL 315 BLUE 'EVERTUFF' SERIES FITTINGS, OR SCH 80 FITTINGS.<br>2.) REQUIRED FOR ALL SOLVENT WELD MAINLINE FITTINGS, 2-1/2", 3", AND 4": USE SPEARS PVC CL 315 BLUE 'EVERTUFF' SERIES FITTINGS ONLY.<br>3.) REQUIRED FOR ALL FITTINGS WITH A THREADED MALE AND/OR FEMALE COMPONENT: 1-1/2" OR SMALLER, USE SPEARS PVC CL 315 BLUE 'EVERTUFF' SERIES FITTINGS, OR SCH 80 FITTINGS. FOR 2" OR LARGER USE SPEARS PVC CL 315 BLUE 'EVERTUFF' SERIES FITTINGS ONLY. FEMALE FITTINGS REQUIRE STAINLESS STEEL REINFORCED COLLAR.<br>4.) FOR ALL SOLVENT WELD LATERAL LINE FITTINGS, 2-1/2" AND SMALLER: USE SPEARS PVC SCH 40 FITTINGS.<br>5.) FOR ALL SOLVENT WELD LATERAL LINE FITTINGS, 3" AND LARGER: USE SPEARS PVC CL 315 BLUE 'EVERTUFF' SERIES FITTINGS ONLY.<br>6.) FOR ALL THREADED PLASTIC NIPPLES USE SCH 80 PVC. | N/A |
| NO SYMBOL | DURA | 1", 1-1/2" AND 2" COUPLING MANIFOLD SYSTEM (0-RING MIPT x SWIVEL) IRRIGATION VALVE CONNECTION FITTING TO PVC MALE ADAPTER WITHIN RCV MANIFOLD.<br>APPROVED FITTING SUBSTITUTE / REPLACEMENT FOR PVC UNIONS. P/N 332-010 AND 332-015 AND 332-020.<br>INSTALL ON EITHER SIDE OF RCV. USE REDUCING PVC MALE ADAPTERS TO UPSIZE TO PVC PIPE AS REQUIRED. FITTING IS O-RING SEALED, DO NOT USE PASTE, DOPE, OR TEFLON TAPE. SIZE PER RCV SIZE. | L9.2.1/E; L9.2.2/D |
| NO SYMBOL | RAIN BIRD | SPECIFICATION GRADE IRRIGATION VALVE BOXES FOR IRRIGATION EQUIPMENT. USE AS REQUIRED: MODELS VB-JMB, VB-STD, VB-10RND, VB-7RND, AND SEB-7XB (FOR DRIP EQUIPMENT). WITH GREEN LIDS IN TURF AREAS, WITH BLACK LIDS IN SHRUB AREAS. | L9.2.2/B,C; L9.2.8/A |
| NO SYMBOL | 3M | WIRE SPLICE CONNECTOR, MODEL DBR/Y-6 FOR RCV AND 2-WIRE CABLE CONNECTIONS AND SPLICES. | L9.2.1/C |
| NO SYMBOL | PAIGE ELECTRIC | 2-WIRE DECODER / HYDROMETER CABLE, MODEL 7072D; #14 GAUGE. INSTALL ALL CABLE WITHIN 1-1/4" ELECTRICAL CONDUIT. CONNECT TO CONTROLLER PER MANUFACTURER'S SPECIFICATIONS. | L9.2.1/B;L9.2.9/A,D;<br>L9.2.10/A,B,C,D,E,F |
| NO SYMBOL | CHRISTY'S | ALL REMOTE CONTROL VALVES SHALL BE OUTFITTED WITH A YELLOW ID TAG INDICATING THE VALVE NUMBER. | L9.2.1/E; L9.2.2/D |
| NO SYMBOL | N/A | CONTRACTOR SHALL COORDINATE ALL CONDUITS, SLEEVES, AND WIRE ROUTING WITH GENERAL CONTRACTOR AND ANY AFFECTED ON-SITE TRADES AS REQUIRED THROUGHOUT PROJECT. | N/A |
| NO SYMBOL | CHRISTY'S | FOR POTABLE WATER SYSTEMS USE 3" WIDE METALLIC DETECTABLE BLUE MARKER TAPE, MODEL TA-DT-3-BI.<br>FOR RECYCLED WATER SYSTEMS USE 3" WIDE METALLIC DETECTABLE PURPLE MARKER TAPE, MODEL TA-DT-3-PRW. TAPE SHALL BE INSTALLED 12" ABOVE ALL IRRIGATION MAINLINES AND SLEEVES. | L9.2.1/D |
| NO SYMBOL | MARIFI | LANDSCAPE FABRIC, MODEL 150N OR 160N, OR APPROVED EQUAL. INSTALL WITHIN ALL VALVE BOXES. PLACE BENEATH ROCK/GRAVEL DRAINAGE MATERIAL AND COVER PIPE HOLES. | L9.2.1/B,E,F,G;<br>L9.2.2/A,D; L9.2.4/A;<br>L9.2.6/D; L9.2.7/D;<br>L9.2.8/A,D,E |

## TREE/PALM IRRIGATION-DRIP

| SYMBOL | MFR. | MODEL NO. / DESCRIPTION | PSI | DETAIL |
|---|---|---|---|---|
| T | RAIN BIRD | XERI-BIRD 8 DRIP MULTI-OUT EMITTER MANIFOLD: MODEL XBD-80. EACH SYMBOL REPRESENTS ONE UNIT PER TREE/PALM, PLACE MANIFOLD UNIT MINIMUM 60" FROM EDGE OF ROOTBALL. INSTALL USING RAIN BIRD XB EMITTERS WITHIN UNIT. ADJUST LOCATION PER ROOTBALL SIZE, TYPICAL. SEE 'EMITTER TABLE' BELOW FOR SIZE AND QUANTITY OF EMITTERS PER TREE/PALM IN SUN OR SHADE AND WHEN TREES/PALMS ARE CONNECTED TO SAME IRRIGATION ZONE. QUANTITY OF EMITTERS AND FLOW RATES AS SHOWN ARE EDUCATED ESTIMATES TO BE USED AS A GUIDE ONLY. CONTRACTOR SHALL BE SOLELY RESPONSIBLE FOR MONITORING TREES/PALMS TO APPLY PROPER QUANTITIES OF WATER AS REQUIRED FOR PLANT MATERIAL BASED ON THE TYPE AND SIZE OF TREE/PALM, AND ALL ENVIRONMENTAL FACTORS DURING PROJECT INSTALLATION AND SUBSEQUENT MAINTENANCE PERIOD. PLACE ALL EMISSION POINTS AT 3/4 DISTANCE FROM TRUNK TO EDGE OF ROOTBALL ACROSS FROM EACH OTHER ON OPPOSITE SIDES OF TREE/PALM ROOTBALL. | 40 | L9.2.4/C,D,E |

| EMITTER TABLE (TREE IN SUN) | |
|---|---|
| PLANT SIZE | # OF EMITTERS |
| 15 GALLON TREE | 2 - 2 GPH |
| 24" BOX TREE | 4 - 2 GPH |
| 36" BOX TREE | 4 - 5 GPH |
| 48" BOX TREE | 6 - 5 GPH |
| 60" BOX TREE | 6 - 7 GPH |
| 72" BOX TREE | 6 - 10 GPH |

| EMITTER TABLE (TREE IN SHADED LOCATION) | | |
|---|---|---|
| PLANT SIZE | # OF EMITTERS | % OF (SUN) GPM |
| 15 GALLON TREE | 2 - 2 GPH | 100% |
| 24" BOX TREE | 3 - 2 GPH | 75% |
| 36" BOX TREE | 3 - 5 GPH | 75% |
| 48" BOX TREE | 4 - 5 GPH | 67% |
| 60" BOX TREE | 6 - 5 GPH | 71% |
| 72" BOX TREE | 6 - 7 GPH | 70% |

| | | | |
|---|---|---|---|
| FT | SPEARS | FLUSH VALVE ASSEMBLY: PROVIDE GRAY 1/2" PVC THREADED BALL VALVE, MODEL 2621-005G, WITH CHAMPION IRRIGATION PRODUCTS (ARROWHEAD BRASS) BRASS HOSE-TO-PIPE THREAD INSERT ADAPTER, MODEL #10F, FOR FLUSHING PVC PIPE WITH STANDARD GARDEN HOSE, INSTALL FLUSH VALVE INSIDE 7" ROUND VALVE BOX, ONE AT THE END OF EACH AND EVERY PIPE RUN IN EACH DIRECTION. MULTIPLE FLUSH VALVES MAY BE REQUIRED WITHIN A TREE DRIP ZONE. CONTRACTOR SHALL BE RESPONSIBLE FOR ALL FLUSH VALVES REQUIRED. WHEN POSSIBLE INSTALL VALVE 18" FROM PAVING FOR EASE OF MAINTENANCE. | L9.2.4/D; L9.2.6/D |

*NOTES:

A. ALL MAINLINES AND LATERAL LINES SHALL BE THOROUGHLY FLUSHED CLEAN BEFORE DRIP MANIFOLD ASSEMBLIES AND/OR DRIP TUBING CONNECTIONS ARE MADE. ALL DRIP TUBING LINES SHALL BE FLUSHED CLEAN BEFORE BACKFILLING.

B. WHEN DIFFERENT SPECIES OF TREES OR PALMS ARE TIED TO THE SAME ZONE VALVE CONTRACTOR SHALL BE REQUIRED TO MAKE ADJUSTMENTS TO SIZE OF EMITTERS (FOR QUANTITY OF WATER PURPOSES) FOR EACH TREE OR PALM IN THE ZONE AS NEEDED TO PROVIDE PROPER AND ADEQUATE AMOUNT OF WATER AS REQUIRED BY EACH SPECIES. CONTRACTOR SHALL CONTACT LANDSCAPE ARCHITECT FOR INFORMATION REGARDING PROPER AND ADEQUATE AMOUNT OF WATER AS REQUIRED BY EACH SPECIES.

KAISER PERMANENTE®

**FOLSOM MOB**

285 Palladio Pkwy,
Folsom, CA 95630

**SMITHGROUP**

550 SOUTH HOPE STREET
SUITE 1950
LOS ANGELES, CA 90071
213.228.6900
smithgroup.com

| ISSUED FOR | REV | DATE |
|---|---|---|
| ENTITLEMENTS | | 9/26/2022 |

SEALS AND SIGNATURES

NOT FOR CONSTRUCTION

SHEET TITLE
IRRIGATION LEGEND

PROJECT NUMBER 13931.000

SHEET NUMBER L9.0.1

Plot Date:

# GENERAL IRRIGATION NOTES

DESIGN CRITERIA:

1. THE IRRIGATION DESIGN IS BASED ON THE EQUIPMENT MANUFACTURERS, MODELS, AND SPECIFICATIONS AS SHOWN IN THE PLAN, LEGEND, DETAILS, AND SPECIFICATIONS. IN THE EVENT THE CONTRACTOR CHOOSES TO USE AN ALTERNATE PRODUCT, THE PRODUCT MUST BE APPROVED BY THE CITY ENGINEER PRIOR TO SUBSTITUTION AND MUST MEET THE SAME DESIGN PARAMETERS (PRECIPITATION RATES, FLOW CHARACTERISTICS, PRESSURE LOSS CHARACTERISTICS, OPTIMAL OPERATING PRESSURE REQUIREMENTS, PROGRAMMING PROTOCOL, ETC). THE CONTRACTOR WILL BE RESPONSIBLE FOR ALL ASSOCIATED CHANGES AND DESIGN REQUIREMENTS (REDESIGN, PLAN CHECK, LAYOUT, CONSTRUCTION ADMINISTRATION, ETC.) AND SHALL TAKE ON AND ASSUME ALL LIABILITY FOR THE DESIGN, IMPLEMENTATION OF THE DESIGN, AND OPERATION OF THE IRRIGATION SYSTEM.
2. IT SHALL BE THE RESPONSIBILITY OF THE CONTRACTOR TO PROCURE AN ORIGINAL SET OF THESE PRINTED IRRIGATION PLANS FOR BIDDING AND CONSTRUCTION.
3. XEROX COPIES OF THESE PLANS ARE NOT ALLOWED FOR BIDDING AND CONSTRUCTION AS THEY MAY NOT SHOW IRRIGATION SYMBOLS, LINE WEIGHTS, OR LINE TYPES CLEARLY.
4. ALL LOCAL MUNICIPAL AND STATE LAWS, RULES AND REGULATIONS GOVERNING OR RELATING TO ANY PORTION OF THIS WORK ARE HEREBY INCORPORATED INTO AND MADE A PART OF THESE SPECIFICATIONS AND THEIR PROVISIONS SHALL BE CARRIED OUT BY THE CONTRACTOR.
5. THE CONTRACTOR SHALL VERIFY SITE CONDITIONS, PROPERTY LINES, DIMENSIONS AND THE LOCATIONS OF ALL EXISTING UTILITIES, STRUCTURES AND SERVICES BEFORE COMMENCING WORK. THE LOCATIONS OF UTILITIES, STRUCTURES AND SERVICES SHOWN IN THESE PLANS ARE APPROXIMATE ONLY. ANY DISCREPANCIES BETWEEN THESE PLANS AND ACTUAL FIELD CONDITIONS SHALL BE REPORTED TO THE OWNER'S REPRESENTATIVE. CONTRACTOR SHALL THOROUGHLY FAMILIARIZE HIMSELF WITH ALL SITE CONDITIONS PRIOR TO BIDDING AND COMMENCING WORK.
6. THE CONTRACTOR SHALL OBTAIN THE PERTINENT ENGINEERING OR ARCHITECTURAL PLANS BEFORE BEGINNING WORK.
7. THE CONTRACTOR SHALL OBTAIN ALL NECESSARY PERMITS REQUIRED TO PERFORM THE WORK INDICATED HEREIN BEFORE BEGINNING WORK.
8. THIS DESIGN IS DIAGRAMMATIC. ALL EQUIPMENT SHOWN IN PAVED AREAS IS FOR DESIGN CLARITY ONLY AND IS TO BE INSTALLED WITHIN PLANTING AREAS.
9. THIS DESIGN IS DIAGRAMMATIC. ALL EQUIPMENT SYMBOL SIZES ARE SHOWN FOR DESIGN CLARITY ONLY. CONTRACTOR SHALL MEASURE ALL DISTANCES AND SPACING FROM CENTER OF SYMBOLS ON THE PLAN AND TRANSFER THOSE DISTANCES TO THE FIELD USING A PROPER MEASURING DEVICE SUCH AS A MEASURE TAPE OR WHEEL.
10. THE CONTRACTOR UNDERSTANDS IT IS THE INTENT OF THESE DRAWINGS TO IRRIGATE ALL NEW PLANT MATERIAL, AND EXISTING PLANT MATERIAL AS REQUIRED, UNLESS SPECIFICALLY NOTATED IN THE DRAWINGS THAT A PLANT MATERIAL IS A NON-IRRIGATED TYPE. WHEN PLANT MATERIAL IS SHOWN IN THESE DRAWINGS TO NOT HAVE IRRIGATION SUBSCRIBED TO IT, THE CONTRACTOR SHALL CONTACT THE OWNER'S AUTHORIZED REPRESENTATIVE AND/OR THE LANDSCAPE ARCHITECT THROUGH THE PROJECT 'REQUEST FOR INFORMATION' (R.F.I.) PROCESS FOR CLARIFICATION AND FURTHER DIRECTION. IT IS THE INTENT OF THESE DRAWINGS THAT ALL NEW PLANT MATERIAL RECEIVE A MINIMUM OF 100% IRRIGATION COVERAGE FROM TWO ADJACENT SPRINKLERS WHEN OVERHEAD SYSTEMS ARE USED, AND AT LEAST ONE OR MORE EMITTER POINTS PER PLANT, AS DIRECTED IN THE DRIP EMITTER LEGEND, WHEN IRRIGATION DRIP SYSTEMS ARE USED. IF THE CONTRACTOR FAILS TO NOTIFY THE OWNER'S AUTHORIZED REPRESENTATIVE AND/OR THE LANDSCAPE ARCHITECT OF A DISCREPANCY THE CONTRACTOR SHALL BE FULLY RESPONSIBLE FOR IRRIGATION TO THE PLANT MATERIAL. IRRIGATION SHALL BE OF THE SAME TYPE AS THE SURROUNDING AREA. ULTIMATELY, IT IS RESPONSIBILITY OF THE CONTRACTOR TO PROVIDE IRRIGATION TO EVERY PLANT THAT IS INSTALLED UNDER HIS SUPERVISION.

EQUIPMENT / P.O.C. NOTES:

11. VERIFY THE ACTUAL LOCATION AND SIZE OF WATER METER AND BOTH STATIC AND DYNAMIC WATER PRESSURE IN THE FIELD PRIOR TO STARTING WORK. IF ANY OF THE P.O.C INFORMATION SHOWN ON THESE DRAWING IS FOUND TO BE DIFFERENT THAN THE ACTUAL P.O.C. INFORMATION GATHERED IN THE FIELD, IMMEDIATELY NOTIFY LANDSCAPE ARCHITECT. SHOULD THE CONTRACTOR FAIL TO FIELD VERIFY THE P.O.C. INFORMATION AND NOTIFY THE ABOVE, ANY ADDITIONAL COSTS INCURRED BY CHANGES REQUIRED TO BE MADE TO THE IRRIGATION SYSTEM BECAUSE OF LOW OR HIGH PRESSURE OR VOLUME SHALL BE THE SOLE RESPONSIBILITY OF THE CONTRACTOR.
12. P.O.C. EQUIPMENT LAYOUT INCLUDING, BUT NOT LIMITED TO, IRRIGATION WATER METER, BOOSTER PUMP, ELECTRICAL STUB-OUT, FILTER, BACKFLOW ASSEMBLY, HYDROMETER, MASTER VALVE, FLOW SENSOR, AND FERTILIZER INJECTOR IS DIAGRAMMATIC DUE TO THE SCALE OF THE DRAWING. LOCATIONS MAY BE SHOWN WITHIN PAVING AND/OR ORIENTED IN A CERTAIN DIRECTION FOR CLARITY ONLY. PLAN DOES NOT ACCOUNT FOR EQUIPMENT BY OTHERS WITHIN VICINITY OF P.O.C. CONTRACTOR SHALL VERIFY SPECIFIC LAYOUT ORIENTATION AND ACTUAL EQUIPMENT LOCATIONS WITH OWNER'S AUTHORIZED REPRESENTATIVE PRIOR TO INSTALLATION OF EQUIPMENT.
13. ACTUAL LOCATION FOR THE INSTALLATION OF THE BACKFLOW PREVENTION DEVICE AND THE AUTOMATIC CONTROLLER IS TO BE DETERMINED IN THE FIELD BY THE OWNER'S AUTHORIZED REPRESENTATIVE. CONTRACTOR SHALL CONTACT REPRESENTATIVE BEFORE COMMENCING WORK.
14. THE CONTRACTOR SHALL NOT WILLFULLY INSTALL ANY EQUIPMENT WHERE SHOWN ON THE PLANS WHEN IT IS OBVIOUS IN THE FIELD THAT CONDITIONS EXIST, WHICH ARE NOT INDICATED ON THE PLANS. SUCH CONDITIONS MAY HAVE BEEN UNKNOWN AND NOT EVIDENT AT THE TIME THESE PLANS WERE PREPARED. ANY SUCH CONDITIONS SHALL BE BROUGHT TO THE ATTENTION OF THE LANDSCAPE ARCHITECT AND/OR OWNER'S AUTHORIZED REPRESENTATIVE PRIOR TO COMMENCING WORK. SHOULD THE CONTRACTOR FAIL TO NOTIFY THE ABOVE, ANY ADDITIONAL COSTS INCURRED BY REQUIRED CHANGES SHALL BE THE SOLE RESPONSIBILITY OF THE CONTRACTOR. CONTRACTOR SHALL ASSUME ALL RESPONSIBILITY FOR ANY FIELD CHANGES DEEMED NECESSARY BY THE OWNER.
15. INSTALL ALL EQUIPMENT AS SHOWN IN THE DETAILS AND SPECIFICATIONS. CONTRACTOR SHALL BE RESPONSIBLE TO COMPLY WITH LOCAL CITY, COUNTY, AND STATE REQUIREMENTS FOR BOTH EQUIPMENT AND INSTALLATION.

CONTROLLER / WIRE NOTES:

16. CONTRACTOR SHALL REFER TO IRRIGATION LEGEND FOR CONTROLLER TYPE. FINAL LOCATION OF CONTROLLER AND ELECTRICAL P.O.C. SHALL BE CONFIRMED WITH THE OWNER'S AUTHORIZED REPRESENTATIVE PRIOR TO COMMENCING WORK.
17. CONTRACTOR SHALL COORDINATE AND VERIFY CONTROLLER PEDESTAL LOCATION IN FIELD WITH ELECTRICIAN FOR CONTROLLER POWER CIRCUIT ROUTING.
18. CONNECTION OF IRRIGATION CONTROLLER TO THE PROVIDED ELECTRICAL STUB-OUT SHALL BE THE RESPONSIBILITY OF THE IRRIGATION CONTRACTOR AND INSTALLATION THEREOF SHALL BE PER LOCAL CODE REQUIREMENTS. CONTRACTOR MAY CHOOSE, IF SO DESIRED, TO SUB THIS WORK TO THE ELECTRICAL CONTRACTOR.
19. CONTROLLER POWER SOURCE SHALL BE SUPPLIED FROM A 'CONTROLLER DEDICATED' CIRCUIT BREAKER.
20. CONTRACTOR SHALL INSTALL HYDROMETER CABLE / FLOW SENSOR WIRE WITHIN A SEPARATE 1" SCH 40 PVC ELECTRICAL CONDUIT.
21. CONTRACTOR SHALL INSTALL 2-WIRE DECODER CABLE WITHIN 1-1/4" ELECTRICAL CONDUIT THROUGHOUT PROJECT. THE 1-1/4" ELECTRICAL CONDUIT MAY BE CONSIDERED THE WIRING SLEEVE MATERIAL BELOW ALL PAVING AND HARDSCAPE AREAS.

CONTROLLER PROGRAMMING NOTES:

22. SYSTEMS ARE DESIGNED TO OPERATE MULTIPLE RCV'S CONCURRENTLY. CONTRACTOR SHALL PROGRAM CONTROLLER TO OPERATE MULTIPLE RCV'S CONCURRENTLY. THE MAXIMUM OPERATIONAL FLOW FOR A SYSTEM SHALL BE 20 GPM FOR A 1" METER, 50 GPM FOR 1-1/2" METER, 100 GPM FOR 2" METER. SET UP THE CONTROLLER 'FLOW MANAGEMENT' PROGRAM TO OPERATE UNDER THESE CONDITIONS.
23. SHOW WATER USE SCHEDULE NOTING IRRIGATION CYCLES AND RUN TIMES PER STATION OR PLANT TYPE (TURF, SHRUB, TREES, SUN, SHADE) MONTHLY OR SEASONALLY.
24. ADD MULTIPLE START TIMES TO PREVENT RUN OFF.
25. WATERING SHALL OCCUR BETWEEN 6PM & 6AM.

SYSTEM GROUNDING NOTES:

26. CONTRACTOR SHALL BE RESPONSIBLE FOR GROUNDING CONTROLLER PER MANUFACTURERS REQUIREMENTS. CONTRACTOR SHOULD CONTACT CONTROLLER MANUFACTURER FOR GROUNDING INSTALLATION INFORMATION. IT SHALL BE THE RESPONSIBILITY OF THE CONTRACTOR TO INFORM AND WORK WITH THE ELECTRICAL CONTRACTOR SO AS TO PROVIDE ADEQUATE GROUNDING AS DETERMINED BY CONTROLLER MANUFACTURER.
27. CONTRACTOR SHALL USE U.L. APPROVED GROUND ROD AND GROUND PLATE WITH CADWELD 'ONE-SHOT' CONNECTION PROCESS FOR CONNECTING THE #6 AWG GROUND WIRE FROM THE CONTROLLER GROUND LUG TO THE ROD. MAXIMUM GROUND RESISTANCE SHALL BE PER CONTROLLER MANUFACTURERS SPECIFICATIONS, BUT NOT GREATER THAN 10 OHMS. CONTACT VINCE NOLLETTI, PAIGE ELECTRIC, FRESNO, CA (559) 431-2574 FOR ADDITIONAL CONTROLLER GROUNDING INSTALLATION INFORMATION.
28. CONTRACTOR SHALL REFER TO DETAILS 'LI-503/B,D,E' FOR SYSTEM GROUNDING INSTALLATION. CONTACT VINCE NOLLETTI, PAIGE ELECTRIC, FRESNO, CA (559) 431-2574 FOR ADDITIONAL CONTROLLER GROUNDING INSTALLATION INFORMATION. ALSO CONTRACTOR MAY CONTACT CONTROLLER ASSEMBLY MANUFACTURER FOR ADDITIONAL CONTROLLER GROUNDING INSTALLATION INFORMATION.
29. CONTRACTOR SHALL REFER TO DETAILS 'LI-508/A,D' AND LI-509/B,D,F FOR DECODER SYSTEM GROUNDING INSTALLATION. CONTRACTOR SHOULD CONTACT THE CONTROLLER AND DECODER MANUFACTURER FOR ADDITIONAL DECODER GROUNDING INSTALLATION INFORMATION, BILL MILLWARD, NETAFIM SPECIFICATION MANAGER(951) 287-4630. ALSO, CONTRACTOR MAY CONTACT VINCE NOLLETTI, PAIGE ELECTRIC, FRESNO, CA (559) 431-2574 FOR ADDITIONAL DECODER GROUNDING INSTALLATION INFORMATION.
30. SURGE PROTECTOR SPACING FOR DECODERS ALONG THE 2-WIRE PATH AND SPECIFIC DECODER GROUNDING REQUIREMENTS SHALL BE DETERMINED BY CONTROLLER/DECODER MANUFACTURER, BUT NOT GREATER THAN 450' ALONG THE 2-WIRE PATH. REFER TO PLAN FOR 'S' SYMBOL, DESIGNATING SURGE PROTECTOR APPROXIMATE LOCATIONS.
31. FOR 2-WIRE CABLE / DECODERS: CONTRACTOR SHALL USE U.L. APPROVED GROUND ROD AND GROUND PLATE WITH CADWELD 'ONE-SHOT' CONNECTION PROCESS FOR CONNECTING THE GROUND WIRES OF THE SURGE PROTECTOR DECODER TO THE 2-WIRE PATH. MAXIMUM GROUND RESISTANCE SHALL BE PER CONTROLLER MANUFACTURERS SPECIFICATIONS, BUT NOT GREATER THAN 10 OHMS. CONTACT VINCE NOLLETTI, PAIGE ELECTRIC, FRESNO, CA (559) 431-2574 FOR ADDITIONAL GROUNDING INSTALLATION INFORMATION.

OVERHEAD SPRINKLER / BUBBLER NOTES:

32. ALL HEADS ARE INTENDED TO BE INSTALLED WITH THE NOZZLE, SCREEN AND ARCS SHOWN ON THE PLANS.
33. OVERHEAD SPRINKLER (SPRAY/ROTOR) HEADS ADJACENT TO ANY NON-PERMEABLE PAVING SHALL BE INSTALLED A MINIMUM DISTANCE OF 24" INCHES FROM THE NON-PERMEABLE SURFACE TO MINIMIZE ANY OVERSPRAY ON TO SURFACE.
34. ALL HEADS ARE REQUIRED TO BE ADJUSTED TO PREVENT OVERSPRAY ONTO ROADWAYS, PATHWAYS, BUILDINGS, WALLS, FENCES, AND HARDSCAPE. THIS INCLUDES, BUT NOT LIMITED TO, ADJUSTMENT OF DIFFUSER PIN OR ADJUSTMENT SCREW, REPLACEMENT OR ADDITION OF PRESSURE COMPENSATING SCREENS, REPLACEMENT OF NOZZLES WITH MORE APPROPRIATE RADIUS UNITS AND THE REPLACEMENT OF NOZZLES WITH ADJUSTABLE ARC UNIT AFTER FIELD REVIEW OF AN AREA DETERMINES SUCH IS REQUIRED.
35. ALL IRRIGATION (SPRAY OR DRIP) ADJACENT TO BUILDING SHALL BE INSTALLED A MINIMUM DISTANCE OF 12" INCHES FROM BUILDING TO AVOID OVERSPRAY ON TO BUILDING OR WINDOWS OR FOUNDATION SATURATION.
36. CONTRACTOR SHALL ADJUST ALL HEADS AS REQUIRED TO ACCOMMODATE ANY VERTICAL OBSTRUCTIONS THAT MAY OCCUR, INCLUDING BUT NOT LIMITED TO TREES, LIGHT POLES, BOLLARDS, FIRE HYDRANTS, DRINKING FOUNTAINS, ETC. CONTRACTOR SHALL ADD SPRINKLER HEADS AND/OR REPLACE 'HALF PATTERN' NOZZLES WITH TWO 'QUARTER PATTERN' NOZZLES AS REQUIRED TO ACHIEVE 100% COVERAGE IN ALL AREAS THAT REQUIRE ADJUSTING. ADDITIONAL HEADS SHALL BE INSTALLED AT NO ADDITIONAL COSTS TO THE CONTRACT. VERIFY ALL HEAD LAYOUT WITH THE OWNER'S AUTHORIZED REPRESENTATIVE PRIOR TO COMMENCING WORK.

RCV / QCV NOTES:

37. REMOTE CONTROL VALVES AND ISOLATION VALVE LOCATIONS ON THIS DRAWING ARE APPROXIMATE. THE LANDSCAPE CONTRACTOR SHALL STAKE OUT EACH ELECTRICAL CONTROL VALVE AND ISOLATION VALVE LOCATION FOR REVIEW AND APPROVAL BY THE OWNER'S AUTHORIZED REPRESENTATIVE PRIOR TO INSTALLATION OF ALL VALVES. FINAL LOCATION AND EXACT POSITIONING FOR ELECTRIC CONTROL VALVES AND ISOLATION VALVES SHALL BE DETERMINED BY THE OWNER'S AUTHORIZED REPRESENTATIVE. MINOR MODIFICATIONS OF REMOTE CONTROL VALVES AND ISOLATION VALVE LOCATIONS AS REQUESTED BY THE OWNER'S AUTHORIZED REPRESENTATIVE SHALL BE PROVIDED BY THE CONTRACTOR AT NO ADDITIONAL COST TO THE PROJECT. FAILURE TO OBTAIN OWNER'S APPROVAL PRIOR TO THE INSTALLATION SHALL CAUSE THE CONTRACTOR TO MAKE PROJECT DIRECTED REVISIONS AT NO ADDITIONAL COST TO THE OWNER. IN GENERAL, UNLESS OTHERWISE DIRECTED BY THE OWNER, ALL VALVES SHALL BE INSTALLED WITHIN THREE FEET FROM EDGE OF HARDSCAPE, WALK OR CURB IN SHRUB PLANTING AREAS.
38. RCV SYMBOL LOCATIONS ARE SHOWN DIAGRAMMATICALLY FOR CLARITY ONLY. TO CONCEAL VALVE BOX LOCATIONS INSTALL EQUIPMENT AWAY FROM BUILDING ENTRANCES AND OTHER AREAS AS DETERMINED BY OWNER'S AUTHORIZED REPRESENTATIVE. CONTRACTOR SHALL CONFIRM LOCATIONS WITH OWNER'S AUTHORIZED REPRESENTATIVE PRIOR TO COMMENCING WORK.
39. ALL RCV'S AND QCV'S SHALL BE INSTALLED ON A SUB-MAIN MANIFOLD AS SHOWN IN DETAIL 'LI-502/B'. RCV AND QCV SYMBOLS ARE SHOWN DIAGRAMMATICALLY ON TOP OF MAINLINE FOR CLARITY ONLY. PLAN DOES NOT SHOW THE MANIFOLD FOR CLARITY PURPOSES.
40. ALL QUICK COUPLER VALVES SHALL TO BE INSTALLED IN SHRUB OR GROUND COVER AREAS WHERE POSSIBLE. ALL QUICK COUPLER VALVES SHALL BE INSTALLED AS SHOWN IN THE INSTALLATION DETAILS. INSTALL QUICK COUPLERS WITHIN 18 INCHES OF HARDSCAPE. CONTRACTOR SHALL TEE OFF OF MAINLINE WITH 1-1/4 INCH MAINLINE PIPE WHERE APPLICABLE TO LOCATE QUICK COUPLER VALVE WITHIN ADJACENT SHRUB OR GROUNDCOVER AREAS AND/OR 18 INCHES FROM HARDSCAPE.

PIPE / SLEEVE NOTES:

41. MAINLINE LAYOUT IS DIAGRAMMATIC DUE TO THE SCALE OF THE DRAWINGS. ROUTING MAY BE SHOWN WITHIN BUILDINGS AND/OR PAVING FOR CLARITY ONLY, ACTUAL MAINLINE LOCATION TO BE WITHIN PLANTER A MINIMUM OF 18" OFF ADJACENT HARDSCAPE AND OTHER OBSTACLES TYP. CONTRACTOR SHALL ADJUST MAINLINE ROUTING TO ACCOMMODATE ANY VERTICAL OBSTRUCTIONS THAT MAY OCCUR, INCLUDING BUT NOT LIMITED TO TREES, LIGHT POLES, BOLLARDS, FIRE HYDRANTS, DRINKING FOUNTAINS, CONCRETE FOOTINGS, ETC.
42. MAINLINE AND/OR LATERAL PIPE ROUTING SHOWN OUTSIDE PROPERTY LINE AND/OR L.O.W. IS DIAGRAMMATIC AND FOR CLARITY ONLY, CONTRACTOR SHALL ROUTE MAINLINE WITHIN PROPERTY LINE AND/OR L.O.W.
43. ALL PIPE MATERIAL AND INSTALLATION LABOR REQUIRED FOR MAINLINE OR LATERAL LINE ADJUSTMENTS DUE TO ACCOMMODATIONS IN THE FIELD SHALL BE INCLUDED WITHIN CONTRACTED PRICE AND MAY NOT BE SUBMITTED AS A CHANGE ORDER TO THE ORIGINAL BID.
44. NO PVC PIPE MAINLINES SHALL BE ROUTED OR ALLOWED CLOSER THAN 12 FEET FROM ANY TREE TRUNK AT ANY TIME. PIPE ROUTING AS SHOWN ON PLANS IS FOR DIAGRAMMATIC PURPOSES ONLY. WHEN PIPE MUST BE ROUTED CLOSER THAN 12 FEET BECAUSE OF HARDSCAPE CONSTRAINTS OR OTHER OBSTACLES CONTRACTOR SHALL INSTALL MAINLINE PIPE WITHIN SLEEVE WHERE PIPE IS WITHIN 12 FEET OF THE TRUNK AND SO INDICATE THE PIPE ROUTING AND SLEEVE LOCATIONS ON THE AS-BUILT DRAWINGS.
45. SLEEVES AND THEIR LOCATIONS ARE DIAGRAMMATICALLY SHOWN FOR CLARITY ONLY. ALL IRRIGATION SLEEVES MAY NOT BE SHOWN FOR CLARITY PURPOSES. CONTRACTOR SHALL INSTALL SLEEVES BELOW ALL PAVING, HARDSCAPE, ETC. AND AS DIRECTED BY THE OWNER'S AUTHORIZED REPRESENTATIVE. ALL PIPE UNDER PAVED AREAS SHALL BE INSTALLED IN A SLEEVE, AT MINIMUM TWICE THE DIAMETER OF THE PIPE CARRIED. SEE LEGEND FOR TYPE. ALL SLEEVES TO BE INSTALLED A MINIMUM DEPTH AS SHOWN ON THE PIPE/SLEEVING DETAIL. SLEEVES TO EXTEND AT LEAST 12" PAST THE EDGE OF THE PAVING.
46. ALL SLEEVE ENDS MUST BE SEALED WITH FOAM SEALANT INSIDE PIPE TO MINIMIZE DEBRIS INTRUSION.
47. LATERAL LINES MAY BE SHOWN WITHIN BUILDINGS AND/OR PAVING FOR CLARITY ONLY, ACTUAL LOCATION TO BE WITHIN PLANTER.
48. THE 1-1/4" ELECTRICAL CONDUIT FOR 2-WIRE DECODER SYSTEMS MAY BE CONSIDERED THE WIRING SLEEVE MATERIAL BELOW ALL HARDSCAPE AND PAVED AREAS.

DRIP/LOW VOLUME SYSTEMS- GENERAL NOTES:

49. ALL MAINLINES AND LATERAL LINES SHALL BE THOROUGHLY FLUSHED CLEAN BEFORE DRIP MANIFOLD ASSEMBLIES AND/OR DRIP TUBING CONNECTIONS ARE MADE. ALL DRIP TUBING LINES SHALL BE FLUSHED CLEAN BEFORE BACKFILLING.
50. ALL LATERAL LINES FOR DRIP ZONES SHALL BE PVC SCH 40 PIPE.

Plot Date:

KAISER PERMANENTE®

**FOLSOM MOB**

285 Palladio Pkwy,
Folsom, CA 95630


**SMITHGROUP**

550 SOUTH HOPE STREET
SUITE 1950
LOS ANGELES, CA 90071
213.228.6900
smithgroup.com


| ISSUED FOR | REV | DATE |
|---|---|---|
| ENTITLEMENTS | | 9/26/2022 |

SEALS AND SIGNATURES

NOT FOR CONSTRUCTION

SHEET TITLE
IRRIGATION NOTES

PROJECT NUMBER
13931.000

SHEET NUMBER
L9.0.2

## W.E.L.O. CALCULATIONS

**California Water Efficient Landscape Ordi**

| City: FOLSOM | Kaiser Permanente HUB | | |
|---|---|---|---|
| Reference Evapotranspiration ($ET_o$) | | 52.3 | Proj |
| Hydrozone # / Planting Description[a] | Plant Factor (PF) | Irrigation Method[b] | Irrigation Efficiency (IE)[c] |
| **Regular Landscape Areas** | | | |
| LOW water use-Planting | 0.35 | Drip | 0.81 |
| LOW water use-Planting | 0.35 | Overhead | 0.75 |
| | | | T |
| **Special Landscape Areas** | | | |
| Recycled Water | | | |
| | | | T |
| | | | |
| | | | Maximum Ar |

**ETAF Calculations**

| Regular Landscape Areas | |
|---|---|
| Total ETAF x Area | 159636 |
| Total Area | 357263 |
| Average ETAF | 0.45 |
| **All Landscape Areas** | |
| Total ETAF x Area | 159636 |
| Total Area | 357263 |
| Average ETAF | 0.45 |

**Average ETAF Areas must be residential are for non-reside**

Project: Kaiser Permanente HUB
City: FOLSOM

[a] Hydrozone # / Planting Description e.g.
1.) Front lawn
2.) Low water use planting
3.) Medium water use planting

[b] Irrigation Method
1.) Overhead Spray
2.) Drip

[c] Irrigation Efficiency
1.) 0.75 for Overhead Spray
2.) 0.81 for Drip

[d] ETWU (Estimated Total Water Required) =
Eto x 0.62 x $ETAF_{(Avg.)}$ x LA
Where 0.62 is a conversion factor to change acre-inches per acre per year to gallons per square foot per year

[e] MAWA (Maximum Annual Water Allowed) =
(Eto) (0.62) [ (ETAF x LA) + ((1-ETAF) x SLA)]
Where 0.62 is a conversion factor to change acre-inches per acre per year to gallons per square foot per year, LA is the total landscape area in square feet, SLA is the total special landscape area in square feet, and ETAF is 0.55 for residential areas and 0.45 for non-residential areas.

**California Water Efficient Landscape Ordir**

**MAWA** (Maximum Annual Water Allowed) =
($Et_o$) (0.62) [ (ETAF x LA) + ((1-ETAF) x SLA)] =

52.3 x .62 x [ ( 0.45 x 357,26

32.43 x [ ( 160,76

32.43 x |

32.4

**ETWU** (Estimated Total Water Use Required) =
$Et_o$ x 0.62 x $ETAF_{(Avg.)}$ x LA =

52.3 x .62 x 0.45 x 357,26

**TOTAL WATER USE REDUCTION**
MAWA - ETWU = 36,733 gallons

## GENERAL IRRIGATION NOTES

POINT SOURCE DRIP SYSTEM NOTES:

A. EMITTER TABLE AT RIGHT IS ESTIMATED EMITTER QUANTITIES AND FLOWS. CONTRACTOR SHALL INSTALL EMITTERS AS SHOWN AT INITIAL INSTALLATION.
B. ALL LATERAL LINES FOR DRIP ZONES SHALL BE PVC SCH 40 PIPE.
C. SUB-LATERAL PIPING AS SHOWN SHALL BE 1/2" SCH 40 PIPE. 'BACKBONE' LATERALS SHALL BE PER PLAN SIZE.
D. CONTRACTOR TO PROVIDE THE QUANTITY OF EMITTERS BASED ON THE ACTUAL PLANT COUNT AND THE EMITTER TABLE SHOWN AT RIGHT.
E. VERIFY THE ACTUAL PLANT QUANTITIES AND SIZES FROM THE LANDSCAPE PLANS PRIOR TO BIDDING OR COMMENCING WORK.
F. POST PLANT INSTALLATION: IT SHALL BE THE RESPONSIBILITY OF LANDSCAPE CONTRACTOR TO REVISE EMITTER SIZES AS MAY BE NEEDED TO PROVIDE ANY WATER VOLUME ADJUSTMENTS FOR HEALTHY PLANT GROWTH. THIS TASK SHALL BE COMPLETED AFTER THREE WEEKS OF PLANT OBSERVATIONS AFTER THE INITIAL INSTALLATION AND AGAIN ONE WEEK BEFORE MAINTENANCE PERIOD IS COMPLETED. THESE EMITTER CHANGES AND FINE TUNE ADJUSTMENTS SHALL BE CARRIED OUT AFTER CONSULTATION AND REVIEW OF WATER NEEDS WITH THE IRRIGATION CONSULTANT AND LANDSCAPE ARCHITECT.

DRIP/LOW VOLUME SYSTEMS- DRIPLINE NOTES:

1. DRIPLINE SYSTEMS RUN TIMES SHALL ALWAYS BE PROGRAMMED TO USE THE CONTROLLER'S 'CYCLE AND SOAK' FUNCTION FOR "PULSE IRRIGATION" PROGRAMMING. AFTER DETERMINING TOTAL ZONE RUN TIME CONTRACTOR SHALL BREAK THE RUN TIME INTO A MINIMUM OF 3-4 CYCLES. INEFFICIENT IRRIGATION OCCURS WHEN ONLY ONE CYCLE IS USED. WATER WILL MIGRATE BELOW THE ROOT ZONE OF TURF OR PLANTS VIA 'GRAVITY FLOW'. SHORT RUN TIMES ALLOW WATER TO SPREAD THROUGHOUT AREA MORE EFFICIENTLY.
2. ALL DRIPLINE TUBING LAYOUT SHALL FOLLOW AND ROUTE PARALLEL TO GRADE, EXCEPT WHERE A LONGITUDE LAYOUT MAY BE FEASIBLE TO FOLLOW PLANTER LINES WHICH ARE NOT PARALLEL TO GRADE FOR CONSTRUCTIBLE PURPOSES. LAYOUT AS SHOWN IN THE PLANS DOES NOT ALWAYS DEPICT ACTUAL LAYOUT DIRECTION. HATCH PATTERNS OF DRIP AREAS AS SHOWN IN PLAN ARE DIAGRAMMATICAL ONLY.
3. DUE TO REQUIREMENT OF MAXIMUM SYSTEM EFFICIENCY ALL DRIPLINE TUBING SHALL LAY LEVEL WITHIN TRENCH. TRENCHES SHALL BE LEVELED ACROSS BOTTOM OF TRENCH, AT NO TIME SHALL BOTTOM OF TRENCH UNDULATE.
4. CONTRACTOR SHALL COMPACT ALL DRIPLINE TRENCHES TO 95% SOIL COMPACTION. CONSISTENT COMPACTION IS REQUIRED TO PROVIDE EFFICIENT AND EVEN WATERING OF TURF OR SHRUB PLANT MATERIAL.
5. CONTRACTOR SHALL AND IS REQUIRED TO USE THE RAIN BIRD INSERT TOOL, MODEL FITINS-TOOL FOR INSTALLATION OF RAIN BIRD DRIPLINE INSERT FITTINGS. CONTRACTOR SHALL ALWAYS INSERT FITTING UNTIL THE FITTING 'STOP' IS ABUTTED TO TUBING.
6. FOR DRIPLINE SYSTEMS IN TURF: IT IS RECOMMENDED TO INSTALL ONE OR TWO DRIP LINES AT A TIME DUE TO THE CLOSE PROXIMITY OF THE 12" SPACING OF ADJACENT LINES. INSTALLATION OF ONLY ONE OR TWO LINES ALLOWS FOR PROPER TRENCHING AND SOIL COMPACTION THAT IS REQUIRED.
7. CONTRACTOR SHALL TEMPORARILY IRRIGATE ANY TURF AREAS INSTALLED OVER SUB-SURFACE DRIP SYSTEMS BY HAND WATERING OR BY USING TEMPORARY OVERHEAD SPRINKLERS, UNTIL THE TURF ROOTS HAVE BECOME ESTABLISHED INTO THE SOIL PROFILE IN SUFFICIENT QUANTITY AND DEPTH TO BE IRRIGATED SOLELY BY THE SUB-SURFACE DRIP SYSTEMS. DURING TURF ESTABLISHMENT THE CONTRACTOR SHALL OPERATE THE SUB-SURFACE DRIP SYSTEMS AND MANUALLY IRRIGATE AS REQUIRED TO ESTABLISH TURF GROWTH. AS TURF ROOTS ARE DEVELOPED, THE HAND WATERING OR OVERHEAD SPRINKLER IRRIGATION OF THE TURF SHALL BE REDUCED UNTIL NO LONGER REQUIRED. THE AMOUNT AND DURATION OF MANUAL IRRIGATION WILL VARY WITH LOCAL CLIMATE CONDITIONS, SOIL PROFILE, AND OTHER SITE SPECIFIC FACTORS. THE CONTRACTOR SHALL BEAR FULL RESPONSIBILITY FOR THE ESTABLISHMENT OF THE TURF AND ITS ROOTS AND SHALL BE REQUIRED TO WEAN THE TURF OFF OF HAND WATERING OR TEMPORARY OVERHEAD IRRIGATION PRIOR TO FINAL ACCEPTANCE AND TURN-OVER OF THE PROJECT.
8. FOR SHRUB AREAS ON SLOPES INSTALLED WITH DRIPLINE TUBING THE CONTRACTOR SHALL BE HELD ACCOUNTABLE FOR CREATING A TRIANGULAR WETTING PATTERN ACROSS ALL SLOPES. LAY TUBING HORIZONTAL TO SLOPE. OFFSET THE EMITTERS BY HALF THE EMITTER SPACING WHEN INSTALLING TUBING TO CREATE A TRIANGULAR WETTING PATTERN ACROSS THE SLOPE. DO NOT INSTALL TUBING SO AS THE EMITTERS ARE DIRECTLY IN LINE (PERPENDICULAR) WITH EACH OTHER.

DRIP/LOW VOLUME SYSTEMS- POINT SOURCE DRIP NOTES:

9. VERIFY THE ACTUAL PLANT QUANTITIES AND SIZES FROM THE LANDSCAPE PLANS PRIOR TO BIDDING OR COMMENCING WORK. CONTRACTOR TO PROVIDE THE QUANTITY OF EMITTERS, BASED ON THE ACTUAL PLANT COUNT WITH REFERRAL TO THE EMITTER TABLE SHOWN IN THE LEGEND.
10. CONTRACTOR TO PROVIDE THE QUANTITY OF EMITTERS BASED ON THE ACTUAL SHRUB AND TREE COUNT AND THE EMITTER TABLES SHOWN. ANY REFERENCE TO TOTAL EMITTER QUANTITIES ON THESE PLANS IS FOR DESIGN USE ONLY. VERIFY THE ACTUAL SHRUB AND TREE QUANTITIES AND SIZES FROM THE LANDSCAPE PLANS PRIOR TO BIDDING OR COMMENCING WORK.
11. THE EMITTER TABLE IN LEGEND IS ESTIMATED EMITTER QUANTITIES AND FLOWS. CONTRACTOR SHALL INSTALL EMITTERS AS SHOWN IN THE TABLE AT INITIAL INSTALLATION.
12. SUB-LATERAL PIPING AS SHOWN IN DETAILS 'LI-504/E' AND 'LI-508/F' SHALL BE 1/2" SCH 40 PIPE. 'BACKBONE' LATERALS SHALL BE PER PLAN SIZE.
13. THE IRRIGATION PLANS AND THE SPECIFICATION OF INDIVIDUAL EMITTERS DO NOT TAKE INTO ACCOUNT THE EXPOSURE IDIOSYNCRASIES OF LOCATION, RELATIVE TO SUN OR SHADE PATTERNS WITHIN A ZONE. BEFORE COMMENCING WORK CONTRACTOR SHALL FIELD REVIEW ALL PLANTER AREAS WHERE POINT SOURCE DRIP ZONES ARE SHOWN ON THE PLANS. CONTRACTOR MAY BE REQUIRED TO SUBSTITUTE THE SIZE OF EMITTER (FLOW RATE) AS CALLED OUT IN THE LEGEND FOR ANOTHER OF A HIGHER OR LOWER FLOW RATE, DEPENDING ON THE LOCATION OF THE EMITTER. FOR SHRUBS LOCATED WITHIN A SHADED AREA AN EMITTER WITH A LOWER FLOW RATE (I.E. 1/2X FLOW RATE) MAY BE REQUIRED THAN WHAT IS REQUIRED FOR THE SAME SHRUB TYPE INSTALLED WITHIN A SUNNY AREA. SHRUBS INSTALLED WITHIN A HIGH HEAT INDEX AREA, SUCH AS WITHIN THE SPHERE OF INFLUENCE OF A GROUND LEVEL WINDOW (OR OTHER REFLECTIVE SURFACE) ON A SOUTH OR WEST FACING EXPOSURE, MAY REQUIRE A HIGHER FLOW EMITTER TO COMPENSATE FOR THE HIGHER WATER EVAPORATION LOSS FROM THE SOIL. WHEN AREAS ARE FOUND, SUCH AS LISTED ABOVE, ON A PROJECT THE CONTRACTOR SHALL REVIEW AREAS WITH THE LANDSCAPE ARCHITECT FOR REQUIRED INDIVIDUAL EMITTER SUBSTITUTIONS. SUCH EMITTER SUBSTITUTIONS SHALL NOT INCREASE THE COST OF THE PROJECT.
14. FOR MULTI-OUTLET DRIP MANIFOLDS: UNITS SHALL BE ALIGNED WITH TREES AS SHOWN IN THE DETAILS. INSTALL AT DISTANCE FROM TREE PER LEGEND DESCRIPTION. CONFIRM ALL PROPOSED LAYOUT IN FIELD WITH OWNER'S AUTHORIZED REPRESENTATIVE PRIOR TO COMMENCING WORK.
15. TREE/PALM DRIP SYSTEM HAS BEEN DESIGNED TO ACCOMMODATE THE UP-SIZING OF EMITTERS TO COMPENSATE FOR FUTURE PLANT GROWTH. MAINTENANCE PERSONNEL SHALL UPSIZE EMITTERS AND QUANTITIES AS REQUIRED TO PROVIDE ADEQUATE WATER FOR HEALTHY PLANT GROWTH.
16. WHEN DIFFERENT SPECIES OF TREES/PALMS ARE TIED TO THE SAME ZONE VALVE CONTRACTOR SHALL BE REQUIRED TO MAKE ADJUSTMENTS TO SIZE OF EMITTERS (FOR QUANTITY OF WATER PURPOSES) FOR EACH SPECIES OF TREEE/PALM IN THE ZONE AS NEEDED TO PROVIDE PROPER AND ADEQUATE AMOUNT OF WATER AS REQUIRED BY EACH SPECIES. CONTRACTOR SHALL CONTACT LANDSCAPE ARCHITECT FOR INFORMATION REGARDING PROPER AND ADEQUATE AMOUNT OF WATER AS REQUIRED BY EACH SPECIES.
17. POST PLANT INSTALLATION: IT SHALL BE THE RESPONSIBILITY OF LANDSCAPE CONTRACTOR TO REVISE EMITTER SIZES AS MAY BE NEEDED TO PROVIDE ANY WATER VOLUME ADJUSTMENTS FOR HEALTHY PLANT GROWTH. THIS TASK SHALL BE COMPLETED AFTER THREE WEEKS OF PLANT OBSERVATIONS AFTER INITIAL INSTALLATION AND AGAIN ONE WEEK BEFORE MAINTENANCE PERIOD IS COMPLETED. ALL EMITTER CHANGES AND FINE TUNE ADJUSTMENTS SHALL BE CARRIED OUT AS PART OF THIS PROJECT WITH NO ADDITIONAL COST TO THE OWNER. COMPLETE AFTER CONSULTATION AND REVIEW OF WATER NEEDS WITH THE IRRIGATION CONSULTANT AND LANDSCAPE ARCHITECT.

REMOVAL AND DISPOSAL NOTES:

18. CONTRACTOR SHALL BE RESPONSIBLE FOR THE COMPLETE REMOVAL AND DISPOSAL OF ALL EXISTING IRRIGATION EQUIPMENT AFFECTED BY THE PROPOSED IRRIGATION IMPROVEMENTS. CONTRACTOR SHALL VERIFY ALL EQUIPMENT TO BE REMOVED AND DISPOSED OF IN FIELD PRIOR TO COMMENCING WORK.
19. CONTRACTOR SHALL MEET WITH THE OWNER PRIOR TO BEGINNING DEMOLITION OR ANY OTHER WORK, AND WALK SITE TO LOCATE EXISTING CONTROLLER AND LINES AND OTHER IRRIGATION EQUIPMENT IF THEY ARE TO BE PROTECTED IN PLACE.

KAISER PERMANENTE®

**FOLSOM MOB**
285 Palladio Pkwy,
Folsom, CA 95630

**SMITHGROUP**

550 SOUTH HOPE STREET
SUITE 1950
LOS ANGELES, CA 90071
213.228.6900
smithgroup.com

| ISSUED FOR | REV | DATE |
|---|---|---|
| ENTITLEMENTS | | 9/26/2022 |

SEALS AND SIGNATURES

NOT FOR CONSTRUCTION

SHEET TITLE
IRRIGATION NOTES & CALCULATIONS

PROJECT NUMBER 13931.000

SHEET NUMBER L9.0.3

Plot Date:

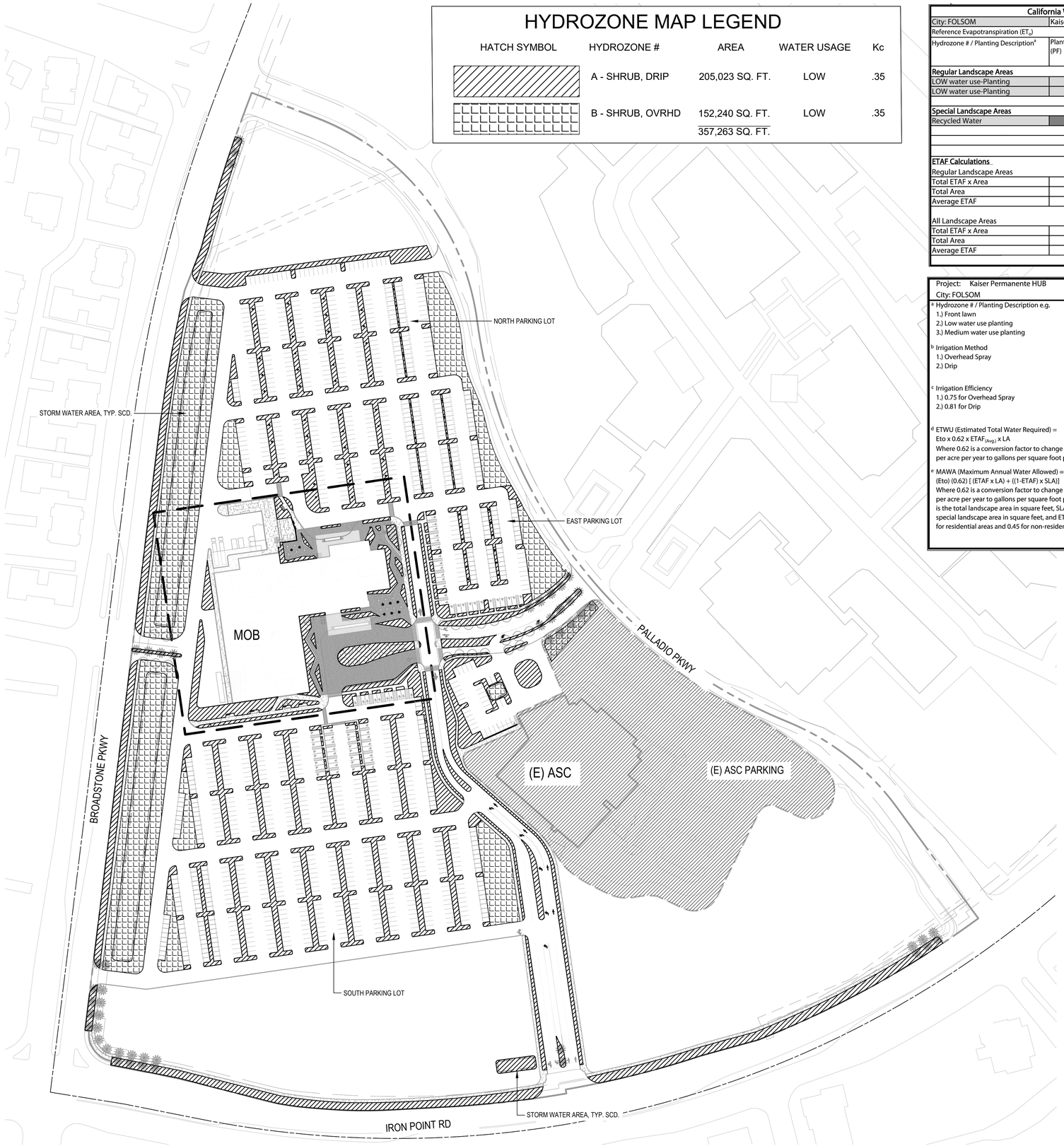


## HYDROZONE MAP LEGEND

| HATCH SYMBOL | HYDROZONE # | AREA | WATER USAGE | Kc |
|---|---|---|---|---|
| | A - SHRUB, DRIP | 205,023 SQ. FT. | LOW | .35 |
| | B - SHRUB, OVRHD | 152,240 SQ. FT. | LOW | .35 |
| | | 357,263 SQ. FT. | | |

## California Water Efficient Landscape Ordinance Worksheet

City: FOLSOM — Kaiser Permanente HUB

Reference Evapotranspiration ($ET_o$): 52.3 — Project Type: Non-Residential — 0.45

| Hydrozone # / Planting Description[a] | Plant Factor (PF) | Irrigation Method[b] | Irrigation Efficiency (IE)[c] | ETAF (PF/IE) | Landscape Area (Sq. Ft.) | ETAF x Area | Estimated Total Water Use (ETWU)[d] |
|---|---|---|---|---|---|---|---|
| **Regular Landscape Areas** | | | | | | | |
| LOW water use-Planting | 0.35 | Drip | 0.81 | 0.43 | 205023 | 88590 | 2872625 |
| LOW water use-Planting | 0.35 | Overhead | 0.75 | 0.47 | 152240 | 71045 | 2303716 |
| | | | | Totals | 357263 | 159636 | 5,176,341 |
| **Special Landscape Areas** | | | | | | | |
| Recycled Water | | | | 1 | 0 | 0 | 0 |
| | | | | Totals | 0 | 0 | 0 |
| | | | | | | ETWU Total | 5,176,341 |
| | | | | | | Maximum Annual Water Allowance (MAWA)[e] | 5,213,075 |

**ETAF Calculations**

Regular Landscape Areas

| | |
|---|---|
| Total ETAF x Area | 159636 |
| Total Area | 357263 |
| Average ETAF | 0.45 |

All Landscape Areas

| | |
|---|---|
| Total ETAF x Area | 159636 |
| Total Area | 357263 |
| Average ETAF | 0.45 |

**Average ETAF for Regular Landscape Areas must be 0.55 or below for residential areas, and 0.45 or below for non-residential areas.**

Project: Kaiser Permanente HUB
City: FOLSOM

[a] Hydrozone # / Planting Description e.g.
1.) Front lawn
2.) Low water use planting
3.) Medium water use planting

[b] Irrigation Method
1.) Overhead Spray
2.) Drip

[c] Irrigation Efficiency
1.) 0.75 for Overhead Spray
2.) 0.81 for Drip

[d] ETWU (Estimated Total Water Required) =
Eto x 0.62 x $ETAF_{(Avg.)}$ x LA
Where 0.62 is a conversion factor to change acre-inches per acre per year to gallons per square foot per year

[e] MAWA (Maximum Annual Water Allowed) =
(Eto) (0.62) [ (ETAF x LA) + ((1-ETAF) x SLA)]
Where 0.62 is a conversion factor to change acre-inches per acre per year to gallons per square foot per year, LA is the total landscape area in square feet, SLA is the total special landscape area in square feet, and ETAF is 0.55 for residential areas and 0.45 for non-residential areas.

## California Water Efficient Landscape Ordinance Calculations

**MAWA** (Maximum Annual Water Allowed) =
($Et_o$) (0.62) [ (ETAF x LA) + ((1-ETAF) x SLA)] =

52.3 x .62 x [ ( 0.45 x 357,263 ) + ( ( 1 - 0.45 ) x - ) ]

32.43 x [ ( 160,768 ) + ( ( 0.55 ) x - ) ]

32.43 x [ ( 160,768 ) + ( - ) ]

32.43 x 160,768 = **5,213,075** gal.

**ETWU** (Estimated Total Water Use Required) =
$Et_o$ x 0.62 x $ETAF_{(Avg.)}$ x LA =

52.3 x .62 x 0.45 x 357,263 = **5,176,341** gal.

**TOTAL WATER USE REDUCTION**
MAWA - ETWU = 36,733 gallons

KAISER PERMANENTE®

**FOLSOM MOB**
285 Palladio Pkwy,
Folsom, CA 95630

**SMITHGROUP**
550 SOUTH HOPE STREET
SUITE 1950
LOS ANGELES, CA 90071
213.228.6900
smithgroup.com

| ISSUED FOR | REV | DATE |
|---|---|---|
| ENTITLEMENTS | | 9/26/2022 |

SEALS AND SIGNATURES

NOT FOR CONSTRUCTION

PROJECT NORTH

SHEET TITLE
OVERALL IRRIGATION PLAN

0' 50' 100' 200'
SCALE: 1" = 100'

PROJECT NUMBER 13931.000

SHEET NUMBER L9.1.0

Plot Date:

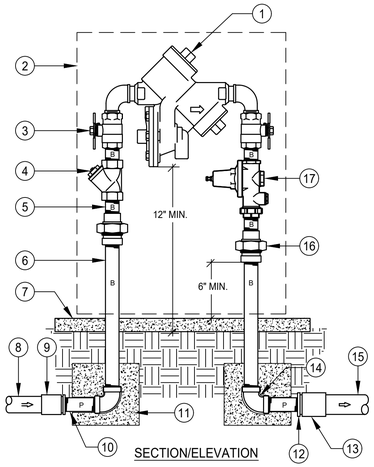


LEGEND
1. BACKFLOW DEVICE, REFER TO LEGEND FOR SPECIFICATION
2. BACKFLOW ENCLOSURE, REFER TO LEGEND FOR SPECIFICATION
3. BRASS BALL VALVE
4. WYE STRAINER, REFER TO LEGEND FOR SPECIFICATION
5. BRASS NIPPLE, MAX. LEN. 3" (4 REQ.)
6. BRASS RISER, LEN. AS REQUIRED, (2 REQ.)
7. CONCRETE SLAB
8. IRRIGATION SERVICE LINE FROM METER
9. PVC SCH 80 SS COUPLER, SVC LINE SIZE
10. PVC SCH 80 NIPPLE, LENGTH BEYOND THRUST BLOCK, (2 REQ.)
11. CONCRETE THRUST BLOCK, 1 CU. FT.
12. PVC SCH 80 REDUCING ADAPTER, SF, COUPLER SIZE (2 REQ.)
13. PVC SCH 80 SS COUPLER, MAINLINE SIZE
14. BRASS ELBOW
15. IRRIGATION MAINLINE
16. BRASS UNION (2 REQ.)
17. PRESSURE REGULATOR, IF SPECIFIED. REFER TO LEGEND FOR SPECIFICATION - IF NOT SPECIFIED, INSTALL ONE BRASS NIPPLE IN PLACE OF TWO 3" NIPPLES AND REGULATOR

NOTE:
A. CONCRETE SLAB SHALL BE MINIMUM 4" THICK AND EXTEND A MINIMUM 6" PAST THE BACKFLOW ASSEMBLY PIPING AND/OR ENCLOSURE ON ALL SIDES.

## A BACKFLOW ASSEMBLY

SCALE: N.T.S.

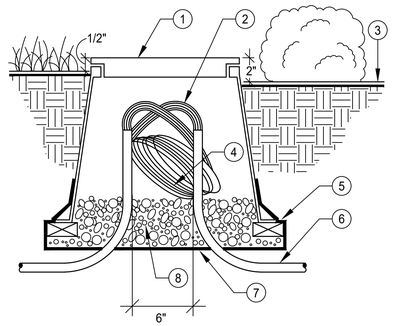


NOTES:
A. PROVIDE WIRE JUNCTION/PULL BOX AT EVERY CHANGE OF DIRECTION AND AT MAXIMUM 200 FOOT INTERVALS.
B. SET TOP OF VALVE BOX 1/2" ABOVE FINISHED GRADE IN TURF AREAS.
C. IN SHRUB AREAS INSTALL VALVE BOX 2" ABOVE SOIL LEVEL OR 1/2" ABOVE MULCH LAYER, WHICHEVER IS HIGHER.

LEGEND
1. RECTANGULAR SPECIFICATION GRADE VALVE BOX WITH BOLT DOWN COVER. BOX TO BE PLACED AT RIGHT ANGLE TO HARDSCAPE EDGE. HEAT BRAND "2W CABLE" ON LID
2. 2-WIRE CABLE
3. FINISH GRADE
4. 36" WIRE EXPANSION LOOP TYPICAL
5. BRICK SUPPORTS
6. PVC ELECTRICAL SWEEP EL
7. LANDSCAPE FABRIC
8. 3/4" CRUSHED GRAVEL, MIN. 6" DEPTH

## B 2-WIRE / COMM CABLE PULL BOX

SCALE: N.T.S.

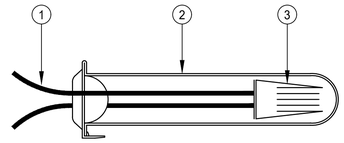


LEGEND
1. LOW VOLTAGE WIRES
2. POLY TUBE PRE-FILLED WITH WATERPROOF GEL
3. WIRE CONNECTOR. WIRES SHALL BE PRE-STRIPPED OF 1/2" OF THE INSULATION PRIOR TO INSERTION INTO THE CONNECTOR. TWIST CONNECTOR ONTO WIRES TO SEAT FIRMLY

## C WIRE CONNECTION

SCALE: N.T.S.

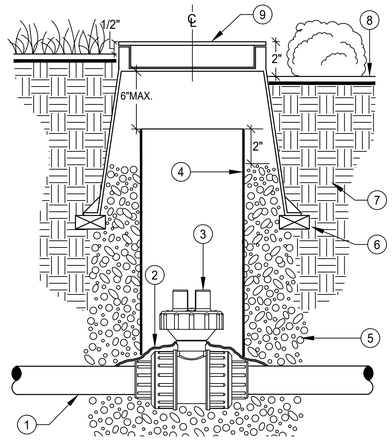


NOTES:
A. SET TOP OF VALVE BOX 1/2" ABOVE FINISHED GRADE IN TURF AREAS.
B. IN SHRUB AREAS INSTALL VALVE BOX 2" ABOVE SOIL LEVEL OR 1/2" ABOVE MULCH LAYER, WHICHEVER IS HIGHER.
C. CONTRACTOR TO PROVIDE ONE STANDARD 30 INCH SPRINKLER KEY WRENCH FOR THE OPERATION OF BALL VALVES.

LEGEND
1. PVC MAINLINE OR MANIFOLD SUBMAIN / BACKBONE PIPE. SEE LEGEND FOR DEPTH AS PER SPECIFICATION
2. LANDSCAPE FABRIC, MINIMUM 4.5 OZ. MATERIAL. SEE SPECIFICATIONS FOR APPROVED TYPE
3. PVC SCH 80 SLO-CLOSE BALL VALVE, INSTALL VALVE CENTERED IN BOX. REFER TO LEGEND FOR SPECIFICATION
4. 8" PVC CL 160 PIPE OR NON-PERF DRAIN PIPE, LENGTH AS REQUIRED. FIT PIPE OUTSIDE UNION. USE FABRIC TO FILL IRREGULARITIES
5. 3/4" CRUSHED GRAVEL, FILL TO 2" BELOW TOP OF SLEEVE AND 5" BELOW BALL VALVE FOR SUPPORT
6. SUPPORT BRICKS, (3 REQ.)
7. SITE SOIL
8. FINISH GRADE
9. 10" ROUND SPECIFICATION GRADE VALVE BOX WITH BOLT DOWN 'T' COVER. HEAT BRAND "BV" ONTO LID.

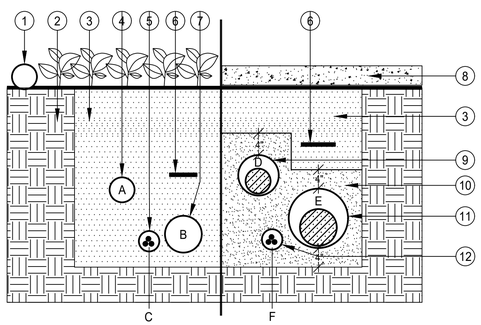


| DEPTH CHART | A | B | C | D | E | F |
|---|---|---|---|---|---|---|
| 6" & LARGER | - | 36" | 36" | 36" | 36" | 36" |
| 3" & 4" | 18" | 24" | 24" | 30" | 36" | 36" |
| 21/2" & SMALLER | 12" | 18" | 18" | 24" | 30" | 30" |
| WIRING | - | - | BESIDE MAIN | - | - | BESIDE MAIN |

LEGEND
1. ON-GRADE LATERAL PIPE, WHEN SPECIFIED
2. UNDISTURBED SOIL
3. COMPACTED BACKFILL
4. LATERAL LINE
5. 2-WIRE CABLE WITHIN ELECTRICAL CONDUIT
6. MAINLINE TRACER TAPE OR AWG #6 BARE COPPER TRACER WIRE, REFER TO LEGEND FOR SPECIFICATION
7. MAINLINE, REFER TO LEGEND FOR SPECIFICATION
8. ROADWAY / PAVING
9. LATERAL LINE SLEEVE
10. SAND BACKFILL; FILL TO 4" ABOVE, AND 4" BELOW SLEEVE
11. MAINLINE SLEEVE
12. CONTROL WIRE SLEEVE FOR CONVENTIONAL WIRE OR 2-WIRE CABLE

NOTES:
A. ALL PIPE SLEEVE UNDER ASPHALT OR VEHICULAR TRAFFIC PAVING SHALL HAVE 4 INCHES OF SURROUNDING BACKFILL MATERIAL, CONSISTING OF CLEAN SAND, ON ALL SIDES OF PIPE.
B. ALL MAINLINE PIPE 3" AND LARGER SHALL HAVE 4 INCHES OF SURROUNDING BACKFILL MATERIAL, CONSISTING OF CLEAN SAND, ON ALL SIDES OF PIPE.
C. SLEEVE UNDER PEDESTRIAN WALKWAYS SHALL EQUAL DEPTHS INDICATED IN COLUMNS A, B, & C.
D. LINES MUST HAVE MIN. CLEARANCE OF 4" FROM EACH OTHER & 12" FROM OTHER TRADES.
E. RUN CONVENTIONAL WIRE BESIDE MAINLINE AT LOCATION SHOWN, TAPE & BUNDLE @ 10' O.C.
F. TIE A 24" LOOP IN ALL WIRING/CABLE AT CHANGES IN DIRECTION, WHEN NOT INSTALLED WITHIN CONDUIT.
G. ALL SLEEVES MUST BE 2X THE DIAMETER OF THE PIPE WITHIN.
H. ALL SLEEVE ENDS MUST BE SEALED WITH FOAM SEALANT INSIDE PIPE TO MINIMIZE DEBRIS INTRUSION.
I. ALL SLEEVES MUST EXTEND 12" MIN. DISTANCE PAST EDGE OF ROADWAY, CURB, OR SIDEWALK.
J. CONTRACTOR MUST ADJUST MAINLINE AROUND ALL STREET LIGHT LOCATIONS, LIGHT BOLLARDS, TREE ROOT BALLS, (MIN. 5' CLEARANCE), AND OTHER OBSTACLES.

## D PIPE / WIRE / SLEEVE INSTALLATION

SCALE: N.T.S.

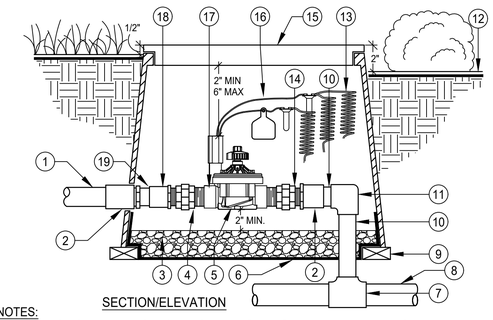


NOTES:
A. SET TOP OF VALVE BOX 1/2" ABOVE FINISHED GRADE IN TURF AREAS.
B. IN SHRUB AREAS INSTALL VALVE BOX 2" ABOVE SOIL LEVEL OR 1" ABOVE MULCH LAYER, WHICHEVER IS HIGHER.

LEGEND
1. PVC LATERAL LINE PIPE TO ZONE
2. PVC SCH 40 SLIP COUPLER, AS REQUIRED
3. 3/4" CRUSHED GRAVEL, MIN. 5"-6" DEPTH
4. PVC SCH 80 TT UNION, SIZE PER RCV
5. REMOTE CONTROL VALVE, REFER TO LEGEND FOR SPECIFICATION
6. LANDSCAPE FABRIC
7. PVC SCH 80 MAINLINE TEE/ELL FITTING
8. PVC MANIFOLD BACKBONE MAINLINE, DEPTH PER SPECS
9. SOLID BRICK, NOMINAL SIZE (MIN. 4 REQ.)
10. PVC PIPE, MINIMUM PRESSURE RATING-315 PSI, SIZE PER IMMEDIATE DOWNSTREAM RCV LATERAL SIZE
11. PVC SCH 80 SS EL, SIZE PER #10
12. FINISH GRADE
13. CONTROL WIRES WITH WATER TIGHT SPLICES PROVIDE 24" COIL OF WIRE AT VALVE
14. PVC SCH 80 REDUCER BUSHING, SPGxFIPT, SIZE AS REQUIRED
15. RECTANGULAR SPECIFICATION GRADE VALVE BOX WITH BOLT DOWN 'T' COVER. HEAT BRAND "RCV" AND ZONE # ON LID
16. RCV ID TAG
17. PVC SCH 80 PVC NIPPLE, RCV SIZE, MIN. LENGTH 4" (2 REQ.)
18. SCH 40 PVC MALE ADAPTER MIPTxSLIP, SIZE PER RCV
19. SCH 40 PVC REDUCER BUSHING, SS, SIZE AS REQUIRED

## E RCV ASSEMBLY FOR OVERHEAD SYSTEMS

SCALE: N.T.S.

## F PVC MAINLINE ISOLATION BALL VALVE

SCALE: N.T.S.

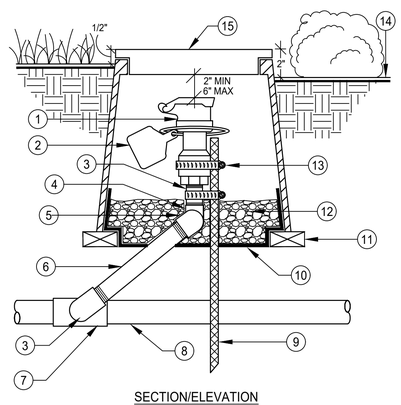


NOTES:
A. PER DEH REQUIREMENTS ALL QUICK COUPLER VALVES SHALL BE OF A TYPE APPROVED FOR RECYCLED WATER USE.
B. SET TOP OF VALVE BOX 1/2" ABOVE FINISHED GRADE IN TURF AREAS.
C. IN SHRUB AREAS INSTALL VALVE BOX 2" ABOVE SOIL LEVEL OR 1" ABOVE MULCH LAYER, WHICHEVER IS HIGHER.

LEGEND
1. QUICK COUPLING VALVE. SEE LEGEND FOR SPECIFICATION
2. APPURTENANCE PURPLE ID TAG
3. BRASS NIPPLE- QCV SIZED 4" MIN. LENGTH
4. BRASS ST. ELL (2 REQ.)
5. BRASS ELL
6. BRASS NIPPLE- QCV SIZED 12" MIN. LENGTH FOR 18" TRENCH 18" MIN. LENGTH FOR 24" TRENCH
7. PVC SCH 80 FITTING, TEE / ELL
8. PVC MAINLINE SEE LEGEND FOR SPECIFICATION
9. #4 REBAR 36" MIN. LENGTH
10. LANDSCAPE FABRIC
11. SUPPORT BRICKS (3 REQ.)
12. 3/4" CRUSHED GRAVEL, MIN. 1 CUBIC FOOT
13. STAINLESS STEEL CLAMP (2 REQ.)
14. FINISH GRADE
15. 10" ROUND SPECIFICATION GRADE VALVE BOX WITH "T" COVER. HEATED BRANDED MARKED 'QCV'

## G QUICK COUPLER ASSEMBLY

SCALE: N.T.S.

Plot Date:

KAISER PERMANENTE®

**FOLSOM MOB**

285 Palladio Pkwy,
Folsom, CA 95630

**SMITHGROUP**

550 SOUTH HOPE STREET
SUITE 1950
LOS ANGELES, CA 90071
213.228.6900
smithgroup.com

| ISSUED FOR | REV | DATE |
|---|---|---|
| ENTITLEMENTS | | 9/26/2022 |

SEALS AND SIGNATURES

NOT FOR CONSTRUCTION

SHEET TITLE
IRRIGATION DETAILS

PROJECT NUMBER 13931.000

SHEET NUMBER L9.2.1

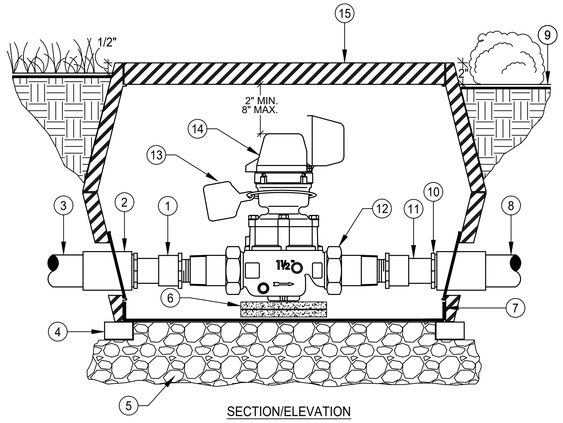


SECTION/ELEVATION

NOTES:
A. SET TOP OF VALVE BOX 1/2" ABOVE FINISHED GRADE IN TURF AREAS.
B. IN SHRUB AREAS INSTALL VALVE BOX 2" ABOVE SOIL LEVEL OR 1/2" ABOVE MULCH LAYER, WHICHEVER IS HIGHER.

LEGEND
1. PVC SCH 80 MALE ADAPTER. SIZE PER HYDROMETER UNIT. (2 REQ.)
2. PVC SCH 80 SLIP COUPLER, MAINLINE SIZE
3. PVC MAINLINE PIPE FROM METER/BACKFLOW ASSEMBLY. PIPE SHALL UPSIZE TO MAINLINE SIZE
4. 4x8 BRICK SUPPORTS (MIN. 6 REQ.)
5. 3/4" CRUSHED GRAVEL, 8" MIN. DEPTH
6. 8"x8" CONCRETE PAVERS FOR SUPPORT
7. LANDSCAPE FABRIC
8. PVC MAINLINE PIPE TO IRRIGATION SYSTEM
9. FINISH GRADE
10. PVC SCH 40 SS REDUCER BUSHING (MAINLINE SIZE x HYDROMETER SIZE)
11. PVC PIPE, MAINLINE TYPE
12. UNION, AS PART OF UNIT
13. APPURTENANCE PURPLE ID TAG
14. HYDROMETER, WIRE TO CONTROLLER PER MANUFACTURER'S SPECIFICATION
15. TWO DOUBLE INTERLOCKING SPECIFICATION GRADE 'JUMBO' RECTANGULAR VALVE BOXES (19"x26" NOM. SIZE) WITH BOLT DOWN 'T' COVER MARKED "MV/FS

## A 1-1/2" HYDROMETER / MASTER VALVE

SCALE: N.T.S.

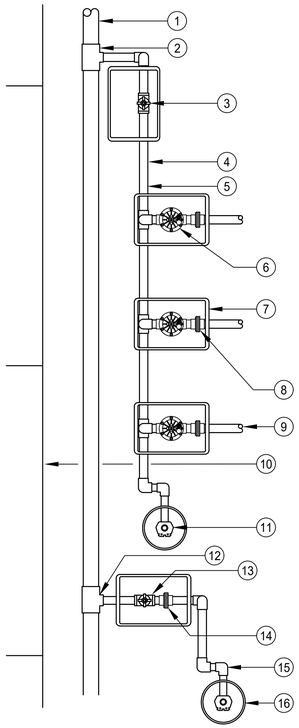

LEGEND
1. IRRIGATION MAINLINE
2. MAINLINE TEE FITTING, MAINLINE x MANIFOLD SIZE
3. MANIFOLD ISOLATION VALVE. MANIFOLD SIZE. REFER TO LEGEND FOR TYPE.
4. ALL VALVE BOXES TO HAVE A MINIMUM 12" SEPARATION BETWEEN BOXES
5. IRRIGATION MANIFOLD "SUB-MAINLINE" PIPE. SIZE PER LARGEST LATERAL PIPE
6. BRASS REMOTE CONTROL VALVE. ILLUSTRATION DOES NOT SHOW REQUIRED SPEARS BALL VALVE UPSTREAM OF RCV.
7. RECTANGULAR SPECIFICATION GRADE VALVE BOX. REFER TO LEGEND FOR TYPE
8. PVC SCH 80 UNION. TWO REQUIRED PER ASSEMBLY. REFER TO RCV ASSEMBLY INSTALLATION DETAILS
9. LATERAL LINE TO SPRINKLERS
10. SIDEWALK / HARDSCAPE EDGE, INSTALL BOXES 12"-18" FROM EDGE
11. QUICK COUPLER VALVE. REFER TO LEGEND FOR TYPE
12. MAINLINE TEE FITTING, MAINLINE x 1-1/2" SIZE
13. QCV MANIFOLD ISOLATION VALVE. REFER TO LEGEND FOR TYPE
14. PVC SCH 80 UNION
15. QUICK COUPLER SWING JOINT
16. 10" ROUND SPECIFICATION GRADE VALVE BOX. REFER TO LEGEND FOR TYPE

## B MANIFOLD LAYOUT

SCALE: N.T.S.

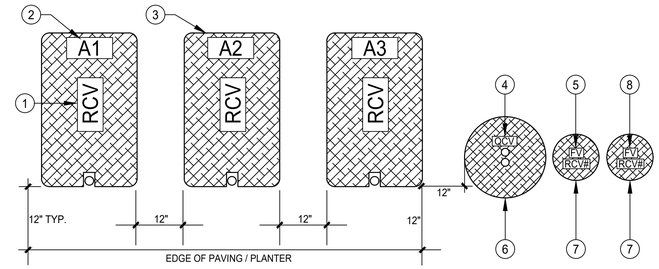


PLAN VIEW

| | | | |
|---|---|---|---|
| ARV | AIR RELIEF VALVE | FV | FLUSH VALVE ASSEMBLY |
| BS | BASKET STRAINER | GV | GATE VALVE |
| BV | BALL VALVE | GRD | GROUND ROD |
| CCC | COMMUNICATION SPLICES | MS | MOISTURE SENSOR |
| DRIP | TREE DRIP MANIFOLD | MV | MASTER VALVE |
| FI | FERTILIZER INJECTOR | SB | SPLICE BOX |
| FS | FLOW SENSOR | RCV | REMOTE CONTROL VALVE |
| | | QCV | QUICK COUPLER VALVE |

NOTES:
A. SPECIFICATION GRADE VALVE BOXES BY RAIN BIRD ONLY.
B. VALVE BOXES SHALL BE LABELED BY HOT IRON BRANDING.
C. LOCATE VALVE ASSEMBLIES 18"-24" FROM HARDSCAPE.
D. LOCATION OF VALVE ASSEMBLIES SHALL BE STAKED FOR APPROVAL BY LANDSCAPE ARCHITECT PRIOR TO INSTALLATION.
E. CENTER VALVE BOXES OVER VALVE TO FACILITATE SERVICING VALVE.
F. SET RCV AND VALVE ASSEMBLIES IN GROUND-COVER/SHRUB AREA WHERE POSSIBLE.
G. SET BOXES AT EQUAL ELEVATIONS W/ TOPS AT 2" ABOVE MULCH IN SHRUBS AND 1/2" ABOVE FINISH GRADE IN TURF.
H. SET BOXES PARALLEL TO EACH OTHER AND PERPENDICULAR TO EDGE.
I. AVOID HEAVILY COMPACTING SOIL AROUND VALVE BOXES TO PREVENT COLLAPSE AND DEFORMATION OF VALVE BOXES.

LEGEND
1. 'RCV' HEAT BRANDED ON VALVE BOX LID
2. APPROPRIATE CONTROLLER AND STATION NUMBER HEAT BRANDED ON VALVE BOX LID
3. RECTANGULAR SPECIFICATION GRADE VALVE BOX, TYP.
4. 'QCV' HEAT BRANDED ON VALVE BOX LID
5. 'FV' WITH DRIP ZONE RCV STATION NUMBER HEAT BRANDED ON ALL DRIP SYSTEM FLUSH VALVE BOX LIDS
6. 10" ROUND SPECIFICATION GRADE QUICK COUPLER VALVE BOX, TYP.
7. 7" ROUND DRIP VALVE BOX, TYP.
8. 'DRIP' WITH TREE DRIP ZONE RCV STATION NUMBER HEAT BRANDED ON ALL TREE DRIP MANIFOLD BOX LIDS

## C VALVE BOX LOCATION / MARKING

SCALE: N.T.S.

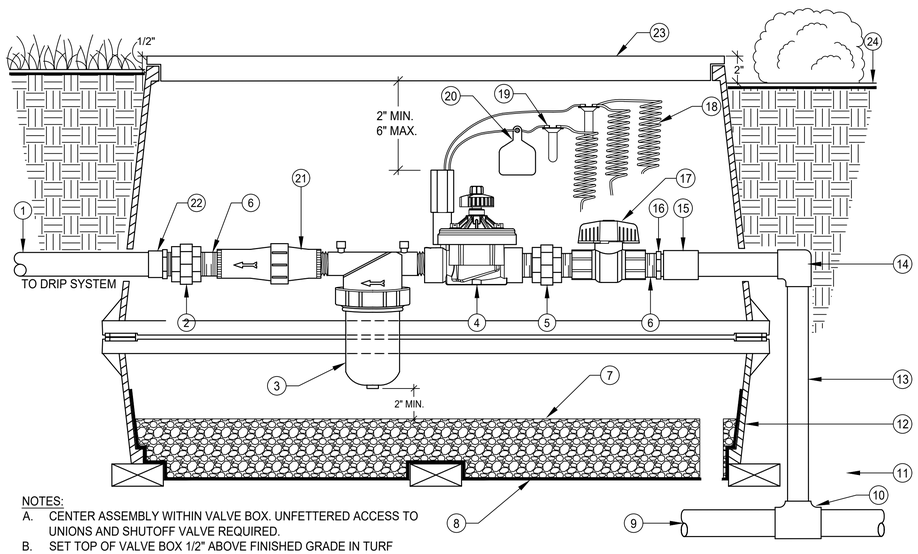


SECTION/ELEVATION

NOTES:
A. CENTER ASSEMBLY WITHIN VALVE BOX. UNFETTERED ACCESS TO UNIONS AND SHUTOFF VALVE REQUIRED.
B. SET TOP OF VALVE BOX 1/2" ABOVE FINISHED GRADE IN TURF AREAS.
C. IN SHRUB AREAS INSTALL VALVE BOX 2" ABOVE SOIL LEVEL OR 1" ABOVE MULCH LAYER, WHICHEVER IS HIGHER.

LEGEND
1. LATERAL LINE PIPE. SIZE PER PLANS
2. 1" PVC SCH 80 UNION
3. 1" NETAFIM DISC FILTER WITH 140 MESH (BLK) RINGS, MODEL DF100-140
4. 1" REMOTE CONTROL VALVE
5. 1" PVC SCH 80 UNION
6. 1"x3" PVC SCH 80 NIPPLE (4 REQ.)
7. 3/4" CRUSHED GRAVEL, MIN. 5" DEPTH
8. LANDSCAPE FABRIC
9. MAINLINE / MANIFOLD PIPE: DEPTH PER SPECS.
10. MAINLINE PVC SCH 80 FITTING-REDUCING. USE PVC BUSHING ON RCV OUTLET AS REQUIRED TO DOWNSIZE PIPE
11. NOMINAL SIZE SOLID BRICK (MIN. 6 REQ.)
12. INVERTED RAIN BIRD JUMBO VALVE BOX, MODEL VBJMB
13. SIZE RISER PIPE PER OUTLET LATERAL SIZE
14. PVC SCH 80 EL, SIZE PER #11. PLACE OUTSIDE BOX
15. PVC SCH 40 SS COUPLING, SIZE PER #11
16. PVC SCH 40 BUSHING, SxT
17. 1" THREADED PVC BALL VALVE. REFER TO LEGEND FOR SPECIFICATION
18. CONTROL WIRES: PROVIDE 24" COIL OF WIRE AT VALVE
19. WIRE SPLICE CONNECTION
20. RCV ID TAG
21. 1" NETAFIM 40 PSI PRESSURE REGULATOR, MODEL WRPR1-40
22. 1" PVC SCH 40 MALE ADAPTER (REDUCING) Mipt x Socket. OUTLET SIZE PER LATERAL PIPE SIZE. REFER TO PLAN FOR SIZE
23. RAIN BIRD JUMBO RECTANGULAR SPECIFICATION GRADE VALVE BOX, MODEL VBJMB. HEAT BRAND 'RCV' AND ZONE # ON LID
24. FINISH GRADE

## D RCV ASSEMBLY FOR DRIPLINE & POINT SOURCE SYSTEMS

SCALE: N.T.S.

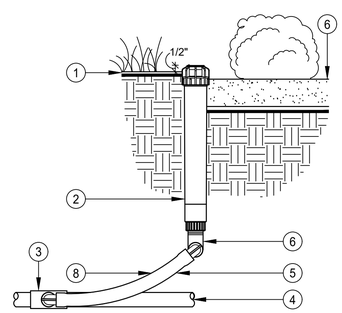


SECTION/ELEVATION

LEGEND
1. FINISH GRADE
2. ECO-INDICATOR
3. DRIP MANIFOLD TEE OR EL
4. PVC DRIP MANIFOLD PIPE. SEE SPECIFICATIONS FOR DEPTH REQUIREMENTS
5. SWING JOINT: HUNTER 'PRO-FLEX' TUBING, HSBE-050 ELBOWS (2)
6. 1/2" MARLEX STREET EL
7. MULCH LAYER
8. ALTERNATE INSTALL: WHEN ATTACHING UNIT TO DRIP TUBING CONTRACTOR MAY INSTALL UNIT USING 1/2" BARBED INSERT FITTINGS AND DRIP POLYETHYLENE TUBING

NOTES:
A. INSTALL ONE (1) ECO-ID WITHIN EACH PLANTER TO SHOW EXTENT OF ZONE WHILE UNDER OPERATION.
B. DUE TO CLARITY ISSUES ECO-ID SYMBOLS ARE NOT SHOWN ON PLAN.
C. CONTRACTOR SHALL REVIEW EACH DRIP ZONE AREA AND LAYOUT TO DETERMINE EXACT QUANTITY OF ECO-ID UNITS TO INSTALL. CONTRACTOR SHALL BE RESPONSIBLE FOR ALL UNITS REQUIRED ON THE PROJECT.
D. IN TURF AREAS INSTALL UNIT 1/2" ABOVE FINISHED GRADE.
E. IN SHRUB AREAS INSTALL UNIT 2" ABOVE SOIL LEVEL OR 1" ABOVE MULCH LAYER, WHICHEVER IS HIGHER.
F. DUE TO NO FACTORY INSTALLED CHECK VALVE INSTALL AT HIGH POINTS OF ZONE, OR INSTALL HUNTER MANUALLY INSTALLED CHECK VALVE, P/N 462237SP.

## E DRIP ZONE OPERATION INDICATOR ASSEMBLY

SCALE: N.T.S.

Plot Date:

KAISER PERMANENTE®

**FOLSOM MOB**

285 Palladio Pkwy,
Folsom, CA 95630

**SMITHGROUP**

550 SOUTH HOPE STREET
SUITE 1950
LOS ANGELES, CA 90071
213.228.6900
smithgroup.com

| ISSUED FOR | REV | DATE |
|---|---|---|
| ENTITLEMENTS | | 9/26/2022 |

SEALS AND SIGNATURES

NOT FOR CONSTRUCTION

SHEET TITLE
IRRIGATION DETAILS

PROJECT NUMBER 13931.000

SHEET NUMBER L9.2.2

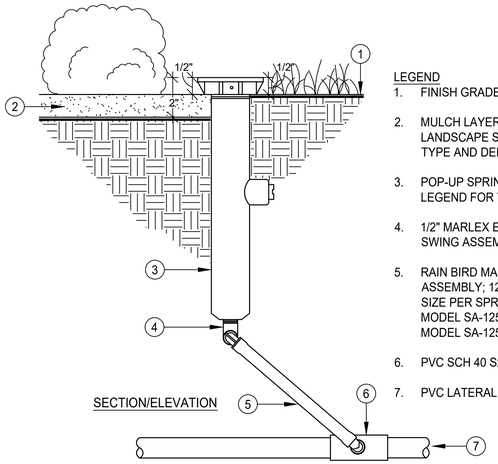


LEGEND
1. FINISH GRADE
2. MULCH LAYER*, REFER TO LANDSCAPE SPECIFICATIONS FOR TYPE AND DEPTH
3. POP-UP SPRINKLER. REFER TO LEGEND FOR TYPE
4. 1/2" MARLEX EL FITTING, PART OF SWING ASSEMBLY.
5. RAIN BIRD MANUFACTURED SWING ASSEMBLY; 12" MIN. LAY LENGTH, SIZE PER SPRINKLER INLET
   MODEL SA-125050 - 1/2" INLET
   MODEL SA-125075 - 3/4" INLET
6. PVC SCH 40 SxSxT TEE OR SxT EL
7. PVC LATERAL PIPE

NOTES:
A. USE TEFLON TAPE ON ALL EXPOSED THREADS.
B. WHERE A MULCH LAYER IS USED AS GROUND COVER INSTALL TOP OF SPRINKLER BODY 1/2" ABOVE MULCH COVER, AT NO TIME SHALL MULCH BURY THE CAP.
C. WHEN MULCH LAYER IS NOT PRESENT INSTALL TOP OF SPRINKLER BODY 2" ABOVE FINISH GRADE.
D. INSTALLATION TO BE COMPLETED IN ACCORDANCE WITH MANUFACTURERS SPECIFICATIONS.
E. INSTALL SPRINKLER HEADS 6" FROM PAVING EDGE IN GROUND COVER AREAS.
F. INSTALL SPRINKLER HEADS 4" FROM PAVING EDGE IN TURF AREAS.
G. INSTALL SPRINKLER HEADS 12" FROM ALL BUILDINGS, WALLS, AND FENCES.
H. INSTALL SPRINKLER HEADS PLUMB.
I. ADJUST SPRAYS OR NOZZLE STREAM TO COVER LANDSCAPE AREA WITHOUT OVERSPRAY ONTO PAVING, FENCES, WALLS, OR BUILDINGS. DO NOT SCALE DRAWINGS.

## A POP-UP SPRINKLER

SCALE: N.T.S.

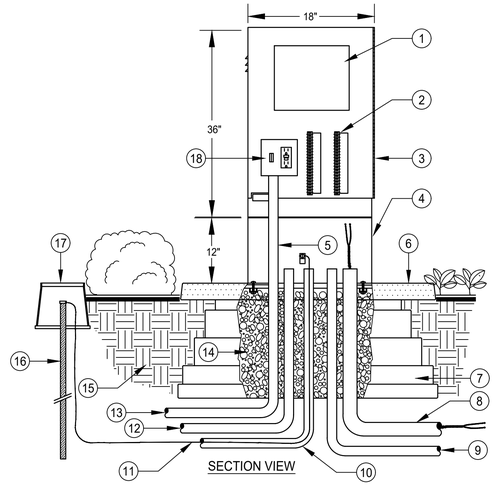


NOTES:
A. CONTROLLER GROUNDING SYSTEM SHALL REQUIRE A COPPER CLAD GROUND PLATE (NOT SHOWN HERE) IN ADDITION TO THE 8' GROUND ROD. PLATE SIZES MAY BE 1/32" x 4" x 96" OR 1/32" x 18" x 24" IN SIZE. REFER TO LEGEND FOR SPECIFICATION AND GROUNDING DETAILS WITHIN PACKAGE FOR ADDITIONAL INFORMATION.
B. GROUNDING RODS AND PLATES SHALL BE COMPLETELY SURROUNDED WITH MINIMUM 1 INCH THICKNESS OF GROUNDING ENHANCEMENT MATERIAL PER GROUNDING EQUIPMENT MANUFACTURERS. REFER TO MANUFACTURERS SPECIFICATIONS FOR ADDITIONAL INFORMATION.

LEGEND
1. IRRIGATION CONTROLLER, INSTALLED WITHIN ENCLOSURE, REFER TO LEGEND FOR SPECIFICATION
2. CONTROLLER ENCLOSURE TERMINAL STRIP FOR REMOTE CONTROL VALVE WIRE CONNECTION
3. FRONT OPENING STAINLESS STEEL PEDESTAL. REFER TO LEGEND FOR SPECIFICATION
4. 12" RISER PEDESTAL EXTENSION. REFER TO LEGEND FOR SPECIFICATION
5. 120 VOLT SERVICE IN ELECTRICAL CONDUIT
6. PREFORMED ALUMINUM PAD, PART OF 'QUICKPAD' ASSEMBLY
7. V.I.T. PRODUCTS (STRONGBOX) ENCLOSURE MOUNTING PAD; 'QUICKPAD' WITH PREFORMED ALUMINUM PAD, PLASTIC BASE AND ALL STAINLESS STEEL HARDWARE
8. 2" SCH 40 ELECTRICAL CONDUIT WITH SWEEP ELL FOR CONTROL WIRES
9. 3/4" SCH 40 ELECTRICAL CONDUIT WITH SWEEP ELL FOR HARDWIRED PHONE COMMUNICATION LINE, INSTALL ONLY IF REQUIRED
10. 3" SCH 40 ELECTRICAL CONDUIT WITH SWEEP EL FOR GROUND WIRE
11. #6 AWG GROUND WIRE. PROVIDE ONE WIRE EACH TO GROUND ROD AND TO GROUND PLATE. (PLATE NOT SHOWN)
12. 3/4" SCH 40 ELECTRICAL CONDUIT WITH SWEEP ELL FOR FLOW SENSOR CABLE. INSTALL ONLY IF SEPARATE FLOW SENSOR WIRES ARE REQUIRED
13. SCH 40 ELECTRICAL CONDUIT WITH SWEEP ELL FOR 117 VAC POWER - SIZE PER ELECTRICAL REQUIREMENTS
14. FILL BASE OF 'QUICKPAD' WITH 3/4" CRUSHED GRAVEL TO TOP OF BASE UNIT
15. COMPACTED SITE SOIL
16. COPPER GROUND ROD, MINIMUM SPECIFICATION: 5/8"X8' WITH CADWELD 'ONE-SHOT' CONNECTION. INSTALL INSIDE A 10" ROUND BOX, GROUND ROD TO BE LOCATED WITHIN 8' TO 15' OF CONTROLLER. CONTRACTOR SHALL INSTALL PER CONTROLLER MANUFACTURER'S SPECIFICATION. (GROUND PLATE/WIRE NOT SHOWN. REFER TO GROUNDING DETAIL)
17. 10" ROUND SPECIFICATION GRADE VALVE BOX
18. ON/OFF SWITCH AND GFI OUTLET RECEPTACLE AS PART OF ENCLOSURE ASSEMBLY
19. GROUND PLATE WITH CONNECTION NOT SHOWN

## B PEDESTAL MOUNT CONTROLLER ASSEMBLY

SCALE: N.T.S.

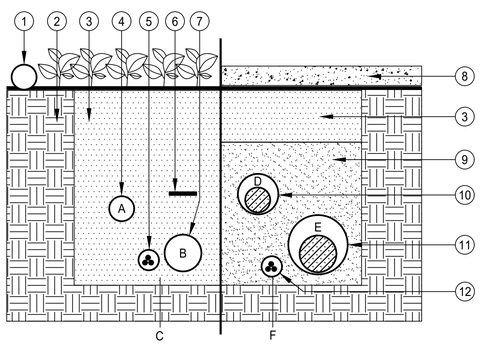


| DEPTH CHART | A | B | C | D | E | F |
|---|---|---|---|---|---|---|
| 6" & LARGER | - | 36" | 36" | 36" | 36" | 36" |
| 3" & 4" | 18" | 24" | 24" | 30" | 36" | 36" |
| 21/2" & SMALLER | 12" | 18" | 18" | 24" | 30" | 30" |
| WIRING | - | - | BESIDE MAIN | - | - | BESIDE MAIN |

LEGEND
1. ON-GRADE LATERAL PIPE
2. UNDISTURBED SOIL
3. COMPACTED BACKFILL
4. LATERAL LINE
5. 2-WIRE CABLE WITHIN ELECTRICAL CONDUIT
6. MAINLINE TRACER TAPE OR AWG #6 BARE COPPER TRACER WIRE, REFER TO LEGEND FOR SPECIFICATION
7. MAINLINE, REFER TO LEGEND FOR SPECIFICATION
8. ROADWAY / PAVING
9. SAND BACKFILL
10. LATERAL LINE SLEEVE
11. MAINLINE SLEEVE
12. CONTROL WIRE SLEEVE

NOTES:
A. SLEEVE UNDER PEDESTRIAN WALKWAYS SHALL EQUAL DEPTHS INDICATED IN COLUMNS A, B, & C.
B. LINES MUST HAVE MIN. CLEARANCE OF 4" FROM EACH OTHER & 12" FROM OTHER TRADES.
C. RUN WIRING BESIDE MAINLINE AT LOCATION SHOWN, TAPE & BUNDLE @ 10' O.C.
D. TIE A 24" LOOP IN ALL WIRING AT CHANGES IN DIRECTION, WHEN NOT INSTALLED WITHIN CONDUIT.
E. ALL SLEEVES MUST BE 2X THE DIAMETER OF THE PIPE WITHIN.
F. ALL SLEEVE ENDS MUST BE SEALED WITH FOAM SEALANT INSIDE PIPE TO MINIMIZE DEBRIS INTRUSION.
G. ALL SLEEVES MUST EXTEND 12" MIN. DISTANCE PAST EDGE OF ROADWAY, CURB, OR SIDEWALK.
H. CONTRACTOR MUST ADJUST MAINLINE AROUND ALL STREET LIGHT LOCATIONS, LIGHT BOLLARDS, TREE ROOT BALLS, (MIN. 5' CLEARANCE), AND OTHER OBSTACLES.

## C PIPE / WIRE / SLEEVE INSTALLATION

SCALE: N.T.S.

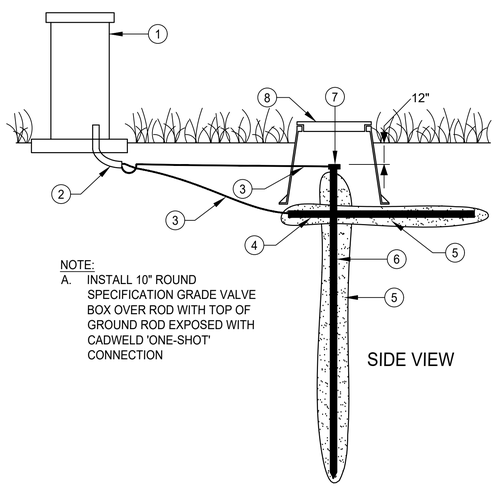


NOTE:
A. INSTALL 10" ROUND SPECIFICATION GRADE VALVE BOX OVER ROD WITH TOP OF GROUND ROD EXPOSED WITH CADWELD 'ONE-SHOT' CONNECTION

LEGEND
1. CONTROLLER ASSEMBLY PEDESTAL. REFER TO LEGEND FOR SPECIFICATION
2. PVC ELECTRICAL SWEEP ELL (1-½" OR LARGER)
3. #6 AWG SOLID BARE COPPER WIRE
4. U.L. APPROVED 4"x96" COPPER GROUND PLATE
5. GROUNDING ENHANCEMENT EARTH CONTACT MATERIAL. SEE NATIONAL ELECTRIC CODE FOR SPECIFICATION
6. 5/8"x8' COPPER CLAD GROUND ROD, U.L. APPROVED
7. CADWELD 'ONE-SHOT' CONNECTION
8. 10" ROUND SPECIFICATION GRADE VALVE BOX

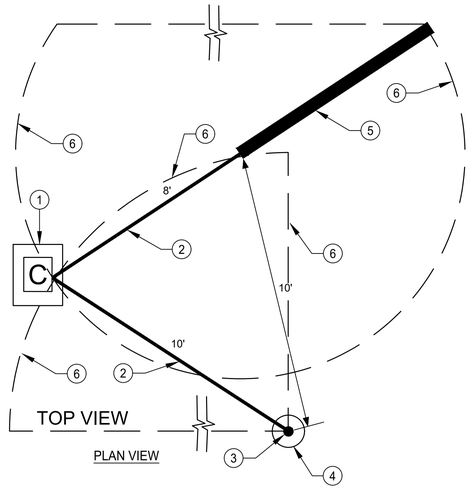


LEGEND
1. CONTROLLER ASSEMBLY PEDESTAL
2. #6 AWG SOLID ISULATED COPPER WIRE
3. U.L. APPROVED 5/8"x8' COPPER GROUND ROD WITH CADWELD 'ONE-SHOT' WIRE CONNECTION, OR CONNECTION BY PAIGE ELECTRIC. INSTALL 10' FROM GRD. PLATE
4. 10" ROUND SPECIFICATION GRADE VALVE BOX
5. 4"x96" COPPER GROUND PLATE, U.L. APPROVED, WITH WIRE CONNECTION BY PAIGE ELECTRIC. INSTALL 10' FROM GRD. ROD
6. 10' RADIUS CIRCLE ELECTRICAL SURGE 'SPHERE OF INFLUENCE'. AT NO TIME SHALL CONTROL WIRES/CABLE PASS THROUGH THIS AREA. ROUTE ALL CONTROL WIRE/CABLE AROUND THIS AREA TO CONTROLLER

## D PEDESTAL CONTROLLER GROUNDING

SCALE: N.T.S.

KAISER PERMANENTE®

**FOLSOM MOB**

285 Palladio Pkwy,
Folsom, CA 95630

**SMITHGROUP**

550 SOUTH HOPE STREET
SUITE 1950
LOS ANGELES, CA 90071
213.228.6900
smithgroup.com

| ISSUED FOR | REV | DATE |
|---|---|---|
| ENTITLEMENTS | | 9/26/2022 |

SEALS AND SIGNATURES

NOT FOR CONSTRUCTION

SHEET TITLE
IRRIGATION DETAILS

PROJECT NUMBER 13931.000

SHEET NUMBER L9.2.3

Plot Date:

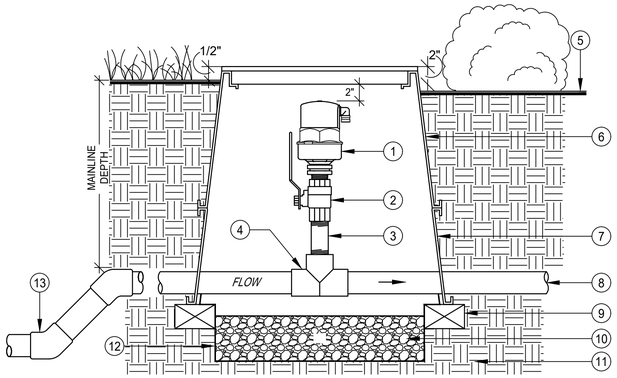


SECTION/ELEVATION

NOTES:
A. INSTALL AIR VENT PER MANUFACTURES RECOMMENDATIONS.
B. SET TOP OF VALVE BOX 1/2" ABOVE FINISH GRADE IN TURF AREAS.
C. IN SHRUB AREAS INSTALL VALVE BOX 2" ABOVE SOIL LEVEL OR 1" ABOVE MULCH LAYER, WHICHEVER IS HIGHER.
D. DUE TO ASSEMBLY NEAR GROUND LEVEL THE REQUIRED USE OF STACKING VALVE BOXES, OR 45 DEGREE ELS TO REACH MAINLINE DEPTH SHALL BE MAINTAINED.

LEGEND
1. AIR/VACUUM CONTINUOUS ACTING AIR VENT. REFER TO LEGEND FOR SPECIFICATION
2. BRASS BALL VALVE FOR ISOLATION
3. SCH 80 PVC NIPPLE, LENGTH AS NECESSARY
4. SCH 80 OR CL315 PVC
5. MAINLINE SxSxT TEE
6. FINISH GRADE
7. RECTANGULAR PLASTIC VALVE BOX WITH LOCKING LID. HEAT BRAND "ARV" ON LID IN 2" HIGH BLOCK LETTERS
8. RECTANGULAR PLASTIC VALVE BOX EXTENSION
9. MAINLINE
10. COMMON BRICK SUPPORTS (4 REQUIRED)
11. FILL BASE OF BOX WITH ¾" GRAVEL
12. COMPACTED NATIVE SOIL
13. FILTER FABRIC - COVER ALL BOX HOLES
14. 45 DEGREE ELBOW

## A 1" AIR/VACUUM CONTINUOUS ACTING AIR VENT

SCALE: N.T.S.

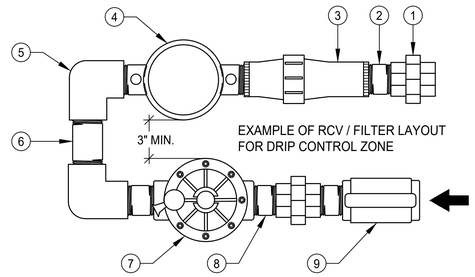


NOTE:
A. TO INSURE ALL COMPONENTS RESIDE WITHIN SPECIFIED VALVE BOX CONTRACTOR MAY INSTALL DRIP RCV ASSEMBLY AS SHOWN.
B. REFER TO DETAIL LI-5.02/D FOR VALVE BOX INSTALLATION.

LEGEND
1. 1" PVC SCH 80 UNION. (2 REQ.)
2. SCH 80 NIPPLE, 1" x CL, (2 REQ.)
3. 1" NETAFIM 40 PSI PRESSURE REGULATOR, MODEL WRPR1-40
4. 1" NETAFIM DISC FILTER WITH 140 MESH (BLK) RINGS, MODEL DF100-140
5. 1" SCH 80 TT EL (2 REQ.)
6. SCH 80 NIPPLE, 1" x SIZE AS REQUIRED TO HAVE SEPARATION OF RCV AND FILTER
7. 1" REMOTE CONTROL VALVE
8. SCH 80 NIPPLE, 1" X 2", (3 REQ.)
9. 1" THREADED PVC BALL VALVE. REFER TO LEGEND FOR SPECIFICATION

## B DRIP RCV ASSEMBLY ALTERNATE INSTALLATION

SCALE: N.T.S.

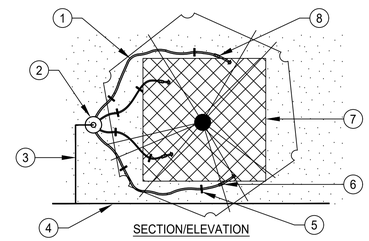


SECTION/ELEVATION

| TREE EMITTER TABLE (SUN) | |
|---|---|
| PLANT SIZE | # OF EMITTERS |
| 15 GAL. TREE | 3 - 2 GPH |
| 24" BOX TREE | 4 - 2 GPH |
| 36" BOX TREE | 4 - 5 GPH |
| 48" BOX TREE | 6 - 5 GPH |
| 60" BOX TREE | 6 - 7 GPH |
| 72" BOX TREE | 6 - 10 GPH |
| 84" BOX TREE | 8 - 12 GPH |
| 96" BOX TREE | 8 - 18 GPH |

LEGEND
1. 1/4" DISTRIBUTION TUBING: RAIN BIRD, MODEL XQ
2. MULTI-OUTLET EMISSION DEVICE: RAIN BIRD XERI-BIRD 8, MODEL XBD-80 (W/O EMITTERS) INSTALLED WITHIN 7" SPECIFICATION GRADE VALVE BOX
3. 1/2" PVC SCH 40 LATERAL LINE PIPE
4. PVC SCH 40 LATERAL LINE PIPE, SEE SPECIFICATIONS FOR DEPTH REQUIREMENTS
5. GALVANIZED TIE-DOWN TUBING U-STAKE: RAIN BIRD, MODEL TDS-050
6. 1/4-INCH TUBING STAKE: RAIN BIRD, MODEL TS-025
7. ROOTBALL OF TREE
8. DIFFUSER BUG CAP: RAIN BIRD MODEL DBC-025

NOTES:
A. PLACE MULTI-OUTLET DRIP MANIFOLD MINIMUM FORTY EIGHT INCHES (48") FROM EDGE OF ROOTBALL. ADJUST PER ROOTBALL SIZE, TYPICAL. INSTALL REQUIRED AMOUNT OF EMITTERS, TUBING, AND BUG CAPS PER EMITTER TABLE. NUMBER OF EMITTERS IN DETAIL ARE FOR EXAMPLE ONLY.
B. SLOPED AREAS: PLACE EMITTERS OFF-CENTER ON UPHILL SIDE OF TREE DEPENDING ON STEEPNESS, TO ALLOW WATER TO FLOW ACROSS ROOTBALL FOR MAXIMUM EFFECTIVE WATER USE.
C. ROUTE 1/4" TUBING AROUND ROOTBALL ALONG OUTSIDE EDGE. DO NOT CROSS ROOTBALL AT ANY TIME.
D. INSTALL RAIN BIRD U-STAKES, MODEL TDS-050 OVER 1/4" TUBING 4"-6" BEHIND EMITTER STAKE AND 1' O.C. (MIN. 2 STAKES PER 1/4" EMITTER TUBING) AROUND ROOTBALL AT EDGE TO ELIMINATE TUBING MOVEMENT.
E. ALL 1/4" TUBING SHALL BE BURIED TO A MINIMUM DEPTH OF 2" BELOW SOIL SURFACE. EMITTER OUTLET AND BUG CAP SHALL BE PLACED AT GRADE.
F.

## E TREE DRIP MANIFOLD INSTALLATION

SCALE: N.T.S.

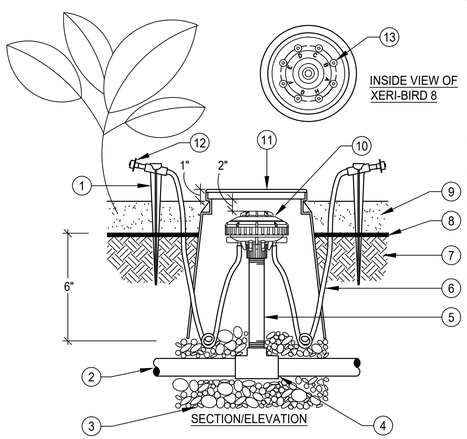


SECTION/ELEVATION

NOTES:
A. COIL ADDITIONAL 9-INCHES OF 1/4" TUBING IN VALVE BOX TO FACILITATE MAINTENANCE.
B. INSTALLED VALVE BOX HEIGHT AT 1/2" ABOVE MULCH COVER.
C. INSTALL MANIFOLD AT MINIMUM OF FORTY EIGHT INCHES (48") FROM EDGE OF ROOTBALL.

LEGEND
1. 1/4-INCH TUBING STAKE: RAIN BIRD, MODEL TS-025. QTYS. - ONE PER EMITTER. SEE EMITTER TABLE FOR QUANTITY OF EMITTERS PER PLANT
2. PVC LATERAL PIPE
3. 3/4" CRUSHED GRAVEL, MIN. 3" DEPTH
4. PVC SCH 40 TEE/ELL FITTING
5. PVC SCH 80 NIPPLE, 1/2" x 10" LENGTH
6. 1/4" DISTRIBUTION TUBING: RAIN BIRD, MODEL XQ
7. AMENDED SITE SOIL
8. FINISH GRADE
9. MULCH LAYER. REFER TO LANDSCAPE SPECIFICATIONS FOR TYPE AND DEPTH
10. MULTI-OUTLET EMISSION DEVICE: RAIN BIRD XERIBIRD 8, MODEL XBD-80 (W/O EMITTERS)
11. 7-INCH VALVE BOX: RAIN BIRD MODEL SEB-7XB
12. DIFFUSER BUG CAP: RAIN BIRD MODEL DBC-025 (TYP.)
13. EMITTER: RAIN BIRD MODELS. SEE EMITTER TABLE FOR TYPE AND QUANTITY OF EMITTERS PER PLANT

## C TREE DRIP EMITTER MANIFOLD ASSEMBLY

SCALE: N.T.S.

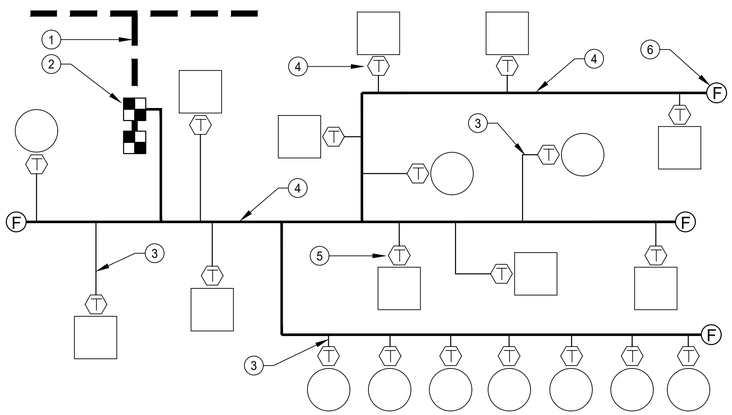


NOTES:
A. CONTRACTOR SHALL ROUTE LATERAL PIPE THROUGHOUT ZONE USING BEST INSTALLATION PRACTICES.
B. PLACE MULTI-EMISSION MANIFOLD AT MINIMUM FORTY EIGHT INCHES (48") FROM TREE/PALM ROOT BALL, TYPICAL.

LEGEND
1. MAINLINE, REFER TO LEGEND FOR TYPE
2. TREE/PALM DRIP ZONE CONTROL VALVE ASSEMBLY, REFER TO LEGEND FOR SPECIFICATION
3. 1/2" SCH 40 PVC SUB-LATERAL PIPE TO DRIP MANIFOLD ASSEMBLY, TYPICAL
4. SCH 40 PVC LATERAL 'BACKBONE' PIPE, TYPICAL. REFER TO PLAN FOR SIZES
5. MULTI-EMISSION MANIFOLD DEVICE PLACEMENT EXAMPLE
6. FLUSH VALVE WITHIN 7" ROUND VALVE BOX, TYPICAL. SEE DETAIL LI-5.02/E

## D TREE DRIP SYSTEMS PVC LATERAL LAYOUT

SCALE: N.T.S.

Plot Date:

KAISER PERMANENTE®

**FOLSOM MOB**
285 Palladio Pkwy,
Folsom, CA 95630

**SMITHGROUP**
550 SOUTH HOPE STREET
SUITE 1950
LOS ANGELES, CA 90071
213.228.6900
smithgroup.com

| ISSUED FOR | REV | DATE |
|---|---|---|
| ENTITLEMENTS | | 9/26/2022 |

SEALS AND SIGNATURES

NOT FOR CONSTRUCTION

SHEET TITLE
IRRIGATION DETAILS

PROJECT NUMBER 13931.000

SHEET NUMBER L9.2.4

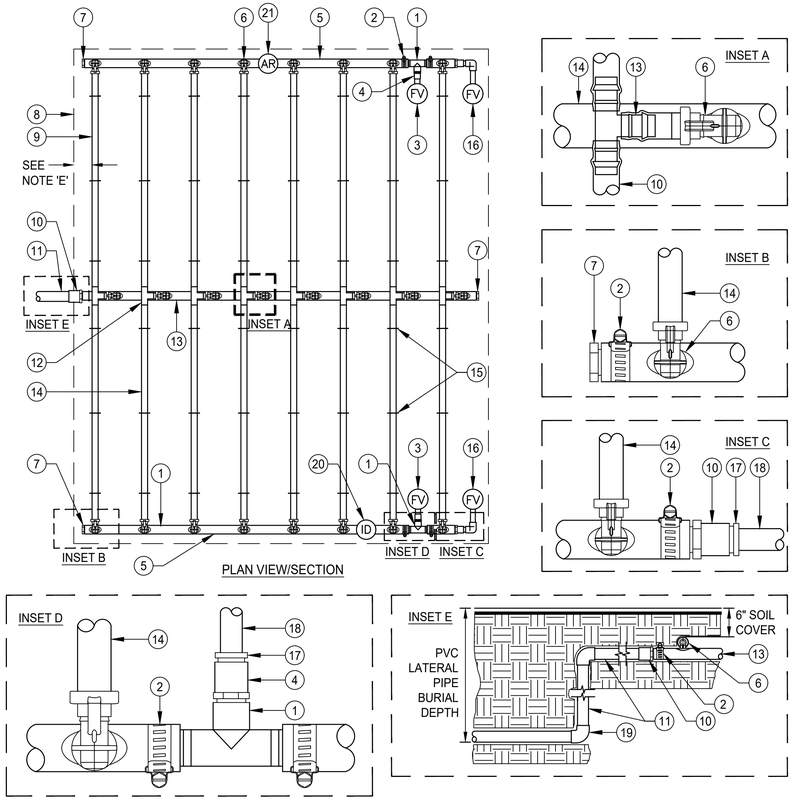


NOTES:

A. INSTALL AIR RELIEF VALVE AT HIGH POINT IN ZONE.
B. RAIN BIRD 'QF' DRIPLINE HEADER -USE 3/4" FOR ZONE OR 'ZONE SECTION' FLOWS 6 GPM OR LESS.
C. RAIN BIRD 'QF' DRIPLINE HEADER-USE 1" FOR ZONE OR 'ZONE SECTION' FLOWS 7 GPM TO 11 GPM MAXIMUM FLOW. FOR ZONES HIGHER THAN 11 GPM, UP TO 21 GPM FLOW THE USE OF TWO HEADERS INSTALLED IN PARALLEL ARE REQUIRED, OR USE 1-1/4" PVC PIPE. HIGHER FLOW THAN 21 GPM USE 1-1/2" PVC PIPE.
D. QF-DRPLINE HEADER SHALL ALWAYS BE INSTALLED AT DEPTH TO ACCOMMODATE THE 6" INSTALLATION DEPTH FOR THE SUB-SURFACE DRIPLINE TUBING.
E. DISTANCE BETWEEN LATERAL ROWS TO BE BASED ON SOIL TYPE, PLANT MATERIALS AND CHANGES IN ELEVATION. MAXIMUM SPACING SHALL BE 12" APART FOR TURF AREAS. MAXIMUM SPACING SHALL BE 18" APART FOR FLAT SHRUB AREAS.
F. INSTALL SUB-SURFCE TUBING MAXIMUM 3" FROM ANY HARDSCAPE EDGE IN TURF AND 9" IN SHRUBS.
G. AIR RELEASE / VACUUM VALVE WHERE SHOWN IS DIAGRAMMATIC ONLY. CONTRACTOR MUST INSTALL AT HIGHEST POINT IN ZONE SECTION AREA FOR PROPER VACUUM RELEASE ACTION.
H. MAXIMUM TUBING LENGTH OF RUN IN EITHER DIRECTION OF SUPPLY MANIFOLD SHALL NOT EXCEED 150' FROM SUPPLY MANIFOLD.

LEGEND

1. PVC INSERT REDUCING TEE, SPEARS, MODEL 1402-101 OR 1402-130. (X" x 1/2") SIZED TO FIT QF DRIPLINE HEADER
2. STAINLESS STEEL CLAMP, OETIKER OR MURRAY TYPE
3. FLUSH VALVE ASSEMBLY WITHIN 7" ROUND BOX. (INSTALLATION FOR TURF ZONE, TYP.) REFER TO LEGEND FOR SPECIFICATION
4. PVC 1/2" MALE ADAPTER (MIPTXSOC), SPEARS, MODEL 436-005
5. RAIN BIRD 'QF' DRIPLINE EXHAUST HEADER:
   -USE 3/4" FOR ZONE OR 'ZONE SECTION' FLOWS LESS THAN 12 GPM
   -USE 1" FOR ZONE OR 'ZONE SECTION' FLOWS 12 GPM TO 22 GPM
6. PRE-INSTRALLED BARB FITTING (TYP.)
7. PVC INSERT PLUG. SPEARS, MODEL 1449-007 OR 1449-010. SIZED TO FIT QF DRIPLINE HEADER. SEE INSET 'A'
8. EDGE OF PERIMETER (PLANTER) AREA
9. PERIMETER DRIPLINE TO BE INSTALLED MAXIMUM OF 3" FROM EDGE OF PERIMETER IN TURF AND 9" FROM EDGE OF PERIMETER IN SHRUB AREA
10. PVC INSERT MALE ADAPTER (BARB X SOC), SPEARS, MODEL 474-007 (3/4") OR 474-010 (1"). SIZED TO FIT QF DRIPLINE HEADER
11. PVC SUPPLY PIPE FROM RCV (SIZED TO MEET LATERAL FLOW DEMAND, REFER TO PLAN FOR SIZE). INSTALL AT PVC LATERAL PIPE DEPTH PER SPECIFICATIONS
12. BARB INSERT FITTING: RAIN BIRD, XFF-TEE. SEE INSET 'A'
13. RAIN BIRD 'QF' DRIPLINE SUPPLY HEADER:
    -USE 3/4" FOR ZONE OR 'ZONE SECTION' FLOWS 6 GPM OR LESS
    -USE 1" FOR ZONE OR 'ZONE SECTION' FLOWS 7 GPM TO 11 GPM
14. SUB-SURFACE DRIPLINE TUBING. REFER TO LEGEND FOR SPECIFICATION
15. GALVANIZED TIE-DOWN STAKE, RAIN BIRD, MODEL TDS-050. (TYPICAL) REFER TO LEGEND FOR SPACING
16. FLUSH VALVE ASSEMBLY WITHIN 7" ROUND BOX. (INSTALLATION IN SHRUB PLANTER, TYP.) REFER TO LEGEND FOR SPECIFICATION
17. PVC SCH 40 REDUCER BUSHING (1"x1/2" or 3/4"x1/2")
18. PVC PIPE TO FLUSH VALVE ASSEMBLY. REFER TO FV ASSEMBLY DETAIL FOR ASSEMBLY CONSTRUCTION
19. PVC SCH 40 ELL (TYP.)
20. ECO-ID ZONE OPERATION INDICATOR
21. AIR RELIEF VALVE: RAIN BIRD, MODEL ARV050, WITHIN 7" ROUND VALVE BOX. CONNECTED TO QF PIPE MANIFOLD. LOCATION AS SHOWN IS DIAGRAMMATIC ONLY

## A DRIPLINE- CENTER FEED LAYOUT W/ RAIN BIRD QF HEADER

SCALE: N.T.S.

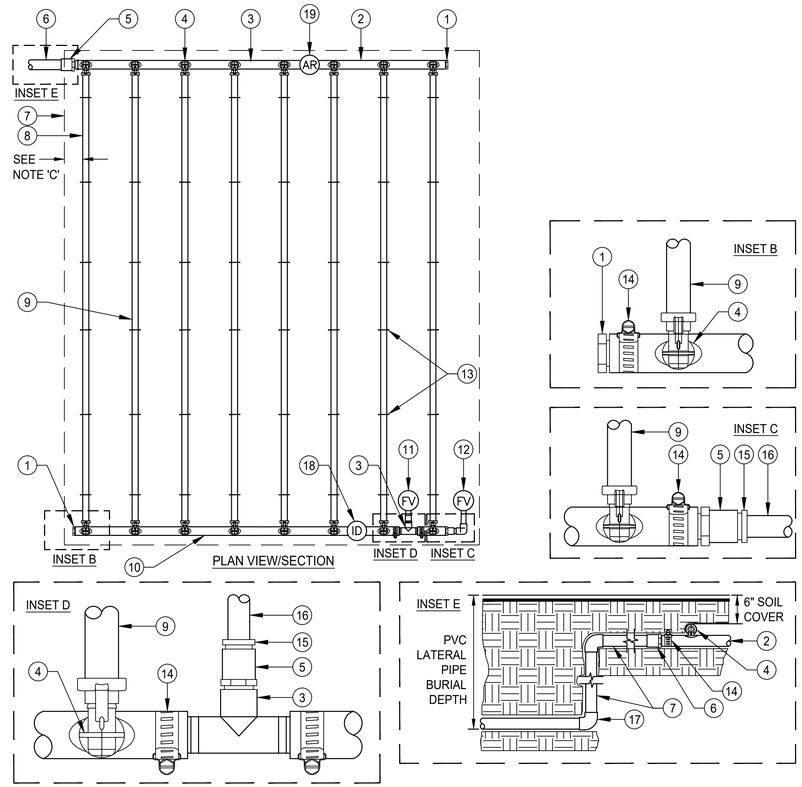


NOTES:

A. INSTALL AIR RELIEF VALVE AT HIGH POINT IN ZONE.
B. RAIN BIRD 'QF' DRIPLINE HEADER -USE 3/4" FOR ZONE OR 'ZONE SECTION' FLOWS 6 GPM OR LESS.
C. RAIN BIRD 'QF' DRIPLINE HEADER-USE 1" FOR ZONE OR 'ZONE SECTION' FLOWS 7 GPM TO 11 GPM MAXIMUM FLOW. FOR ZONES HIGHER THAN 11 GPM, UP TO 21 GPM FLOW THE USE OF TWO HEADERS INSTALLED IN PARALLEL ARE REQUIRED, OR USE 1-1/4" PVC PIPE. HIGHER FLOW THAN 21 GPM USE 1-1/2" PVC PIPE.
D. QF-DRPLINE HEADER SHALL ALWAYS BE INSTALLED AT DEPTH TO ACCOMMODATE THE 6" INSTALLATION DEPTH FOR THE SUB-SURFACE DRIPLINE TUBING.
E. DISTANCE BETWEEN LATERAL ROWS TO BE BASED ON SOIL TYPE, PLANT MATERIALS AND CHANGES IN ELEVATION. MAXIMUM SPACING SHALL BE 12" APART FOR TURF AREAS. MAXIMUM SPACING SHALL BE 18" APART FOR FLAT SHRUB AREAS.
F. INSTALL SUB-SURFCE TUBING MAXIMUM 3" FROM ANY HARDSCAPE EDGE IN TURF AND 9" IN SHRUBS.
G. AIR RELEASE / VACUUM VALVE WHERE SHOWN IS DIAGRAMMATIC ONLY. CONTRACTOR MUST INSTALL AT HIGHEST POINT IN ZONE SECTION AREA FOR PROPER VACUUM RELEASE ACTION.
H. MAXIMUM TUBING LENGTH OF RUN IN EITHER DIRECTION OF SUPPLY MANIFOLD SHALL NOT EXCEED 200' FROM SUPPLY MANIFOLD.

LEGEND

1. PVC INSERT PLUG. SPEARS, MODEL 1449-007 OR 1449-010. SIZED TO FIT QF DRIPLINE HEADER. SEE INSET 'A'
2. RAIN BIRD QF DRIPLINE SUPPLY HEADER:
   -USE 3/4" FOR ZONE OR 'ZONE SECTION' FLOWS 6 GPM OR LESS
   -USE 1" FOR ZONE OR 'ZONE SECTION' FLOWS 7 GPM TO 11 GPM
3. PVC INSERT REDUCING TEE, SPEARS, MODEL 1402-101 OR 1402-130. (X" X 1/2") SIZED TO FIT QF DRIPLINE HEADER
4. PRE-INSTRALLED BARB FITTING (TYP.)
5. PVC INSERT MALE ADAPTER (BARB x SOC), SPEARS, MODEL 474-007 (3/4") or 474-010 (1"). SIZED TO FIT DRIPLINE HEADER
6. PVC SUPPLY PIPE FROM RCV (SIZED TO MEET LATERAL FLOW DEMAND, REFER TO PLAN FOR SIZE). INSTALL AT PVC LATERAL PIPE DEPTH PER SPECIFICATION
7. EDGE OF PERIMETER (PLANTER) AREA
8. PERIMETER DRIPLINE TO BE INSTALLED MAXIMUM OF 3" FROM EDGE OF PERIMETER IN TURF AND 9" FROM EDGE OF PERIMETER IN SHRUB AREAS
9. SUB-SURFACE DRIPLINE TUBING. REFER TO LEGEND FOR SPECIFICATION
10. QF-MANIFOLD EXHAUST HEADER:
    -USE 3/4" FOR ZONE OR 'ZONE SECTION' FLOWS LESS THAN 10 GPM
    -USE 1" FOR ZONE OR 'ZONE SECTION' FLOWS 11 GPM TO 15 GPM
11. FLUSH VALVE ASSEMBLY (TYP.) WITHIN 7" ROUND BOX. (INSTALLATION FOR TURF ZONE, TYP.) REFER TO LEGEND FOR SPECIFICATION
12. FLUSH VALVE ASSEMBLY WITHIN 7" ROUND BOX. (INSTALLATION IN SHRUB PLANTER, TYP.) REFER TO LEGEND FOR SPECIFICATION
13. GALVANIZED TIE-DOWN STAKE, RAIN BIRD, MODEL TDS-050. REFER TO LEGEND FOR SPACING
14. STAINLESS STEEL CLAMP, OETIKER OR MURRAY TYPE
15. PVC REDUCER BUSHING, SPEARS, MODEL 437-101 or 437-130. SIZED TO FIT INSERT ADAPTER (3/4"x1/2" or 1"x1/2")
16. 1/2" PVC PIPE TO FLUSH VALVE ASSEMBLY. REFER TO FV ASSEMBLY DETAIL FOR ASSEMBLY CONSTRUCTION
17. PVC SCH 40 ELL (TYP.)
18. ECO-ID ZONE OPERATION INDICATOR
19. AIR RELIEF VALVE: RAIN BIRD, MODEL ARV050, WITHIN 7" ROUND VALVE BOX. CONNECTED TO QF PIPE MANIFOLD. LOCATION AS SHOWN IS DIAGRAMMATIC ONLY

## B DRIPLINE- END FEED LAYOUT W/ RAIN BIRD QF HEADER

SCALE: N.T.S.

Plot Date:

KAISER PERMANENTE®

**FOLSOM MOB**

285 Palladio Pkwy,
Folsom, CA 95630

**SMITHGROUP**

550 SOUTH HOPE STREET
SUITE 1950
LOS ANGELES, CA 90071
213.228.6900
smithgroup.com

| ISSUED FOR | REV | DATE |
|---|---|---|
| ENTITLEMENTS | | 9/26/2022 |

SEALS AND SIGNATURES

NOT FOR CONSTRUCTION

SHEET TITLE

IRRIGATION DETAILS

PROJECT NUMBER 13931.000

SHEET NUMBER L9.2.5

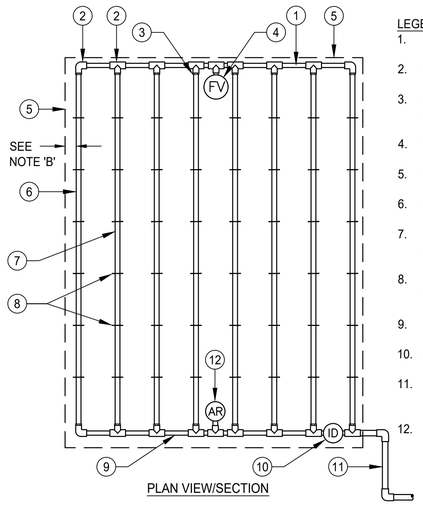


LEGEND
1. PVC EXHAUST HEADER
2. PVC SCH 40 TEE OR ELL (TYPICAL)
3. BARB X MALE FITTING: RAIN BIRD XFF-MA-XXX FITTING (TYPICAL)
4. FLUSH VALVE (TYPICAL) WITHIN 10" ROUND BOX
5. PERIMETER OF AREA
6. PERIMETER DRIPLINE PIPE TO BE INSTALLED
7. SUB-SURFACE DRIPLINE TUBING: REFER TO LEGEND FOR SPECIFICATION
8. GALVANIZED TIE-DOWN STAKE, RAIN BIRD, MODEL TDS-050. (TYPICAL)
9. SUPPLY HEADER
10. ECO-ID ZONE OPERATION INDICATOR
11. LATERAL PIPE SUPPLY MANIFOLD WITHIN A 12" TRENCH, PER PIPE DETAIL
12. AIR / VACUUM RELIEF VALVE, REFER TO LEGEND FOR SPECIFICATION. INSTALLED WITHIN 7" ROUND VALVE BOX. CONNECTED TO PVC PIPE MANIFOLD. LOCATION AS SHOWN IS DIAGRAMMATIC ONLY

NOTES:
A. INSTALL AIR RELIEF VALVES AT ALL HIGH POINT(S) IN ZONE.
B. DISTANCE BETWEEN LATERAL ROWS TO BE BASED ON SOIL TYPE, PLANT MATERIALS AND CHANGES IN ELEVATION. MAXIMUM SPACING SHALL BE 12" APART FOR TURF AREAS. MAXIMUM SPACING SHALL BE 16" APART FOR FLAT SHRUB AREAS.
C. INSTALL SUB-SURFACE TUBING MAXIMUM 3" FROM ANY HARDSCAPE EDGE IN TURF AND 9" IN SHRUBS.
D. PLACE TIE DOWN STAKES EVERY 3' IN SAND, 4' IN LOAM, AND 5' IN CLAY SOILS.
E. MAXIMUM TUBING LENGTH OF RUN SHALL NOT EXCEED 150' FROM LATERAL PIPE SUPPLY MANIFOLD.

## A DRIPLINE- END FEED LAYOUT

SCALE: N.T.S.

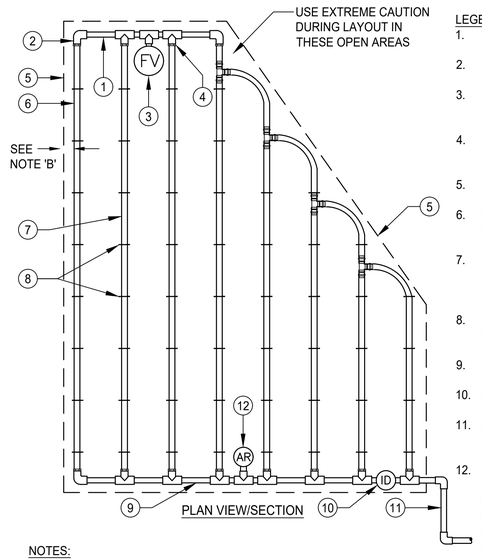


LEGEND
1. PVC EXHAUST HEADER
2. PVC SCH 40 TEE OR ELL (TYPICAL)
3. FLUSH VALVE WITHIN 10" ROUND BOX (TYPICAL)
4. BARB X MALE FITTING: RAIN BIRD XFF-MA-XXX FITTING (TYPICAL)
5. PERIMETER OF AREA
6. PERIMETER DRIPLINE PIPE TO BE INSTALLED
7. SUB-SURFACE DRIPLINE TUBING: REFER TO LEGEND FOR SPECIFICATION
8. GALVANIZED TIE-DOWN STAKE, RAIN BIRD, MODEL TDS-050. (TYPICAL)
9. SUPPLY HEADER
10. ECO-ID ZONE OPERATION INDICATOR
11. LATERAL PIPE SUPPLY MANIFOLD WITHIN A 12" TRENCH, PER PIPE DETAIL
12. AIR / VACUUM RELIEF VALVE, REFER TO LEGEND FOR SPECIFICATION. INSTALLED WITHIN 7" ROUND VALVE BOX. CONNECTED TO PVC PIPE MANIFOLD. LOCATION AS SHOWN IS DIAGRAMMATIC ONLY

NOTES:
A. INSTALL AIR RELIEF VALVES AT ALL HIGH POINT(S) IN ZONE.
B. DISTANCE BETWEEN LATERAL ROWS TO BE BASED ON SOIL TYPE, PLANT MATERIALS AND CHANGES IN ELEVATION. MAXIMUM SPACING SHALL BE 12" APART FOR TURF AREAS. MAXIMUM SPACING SHALL BE 18" APART FOR FLAT SHRUB AREAS.
C. INSTALL SUB-SURFACE TUBING MAXIMUM 3" FROM ANY HARDSCAPE EDGE IN TURF AND 9" IN SHRUBS.
D. PLACE TIE DOWN STAKES EVERY 3' IN SAND, 4' IN LOAM, AND 5' IN CLAY SOILS.
E. MAXIMUM TUBING LENGTH OF RUN SHALL NOT EXCEED 150' FROM LATERAL PIPE SUPPLY MANIFOLD.

## B DRIPLINE- IRREGULAR FEED LAYOUT

SCALE: N.T.S.

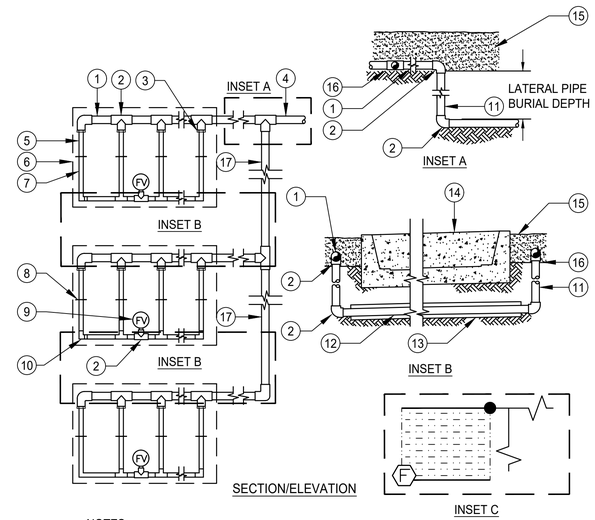


NOTES:
A. REFER TO INSERT 'C' FOR EQUIPMENT SYMBOLOGY OF A MULTI-PLANTER LAYOUT AS SHOWN ON PLANS. CONNECT PVC LATERAL PIPE TO DRIPLINE SUPPLY HEADER(S) AT BLACK DOT WHERE SHOWN ON PLANS. PLACE FLUSH VALVE ON EXHAUST HEADER/FOOTER AT FAR END OF PLANTER(S) WHERE SHOWN ON PLANS.
B. DISTANCE BETWEEN LATERAL ROWS TO BE BASED ON SOIL TYPE, PLANT MATERIALS AND CHANGES IN ELEVATION. SEE LEGEND FOR SPECIFICATION.
C. LENGTH OF LONGEST DRIPLINE LATERAL SHOULD NOT EXCEED THE MAXIMUM SPACING SHOWN IN THE ACCOMPANYING TABLE.
D. PLACE TIE DOWN STAKES EVERY 3' IN SAND, 4' IN LOAM, AND 5' IN CLAY.
E. AT FITTINGS WHERE THERE IS A CHANGE IN DIRECTION SUCH AS TEES OR ELBOWS, USE TIE-DOWN STAKES ON EACH LEG OF THE CHANGE OF DIRECTION.

| DRIPLINE MAXIMUM LATERAL LENGTHS (FEET) | | | | | | |
|---|---|---|---|---|---|---|
| | 12" Spacing | | 18" Spacing | | 24" Spacing | |
| PSI | 0.6 GPH | 0.9 GPH | 0.6 GPH | 0.9 GPH | 0.6 GPH | 0.9 GPH |
| 40 | 150 | 150 | 200 | 200 | 300 | 300 |

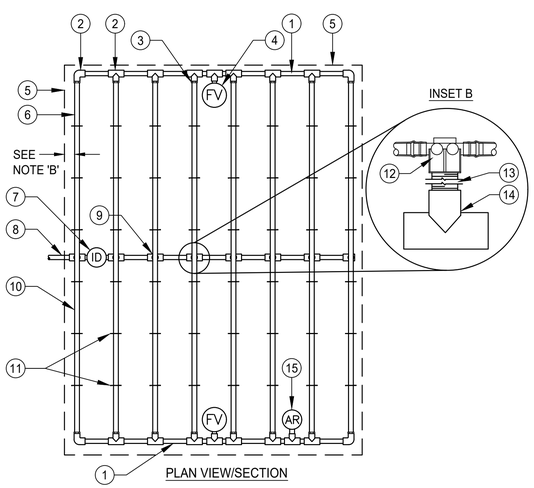


LEGEND
1. PVC EXHAUST HEADER
2. PVC SCH 40 FEMALE THRD TEE (SSF) OR ELL (SF) (TYPICAL)
3. BARB X MALE FITTING: RAIN BIRD XFF-MA-XXX FITTING (TYPICAL)
4. FLUSH VALVE (TYPICAL) WITHIN 10" ROUND BOX
5. PERIMETER OF AREA
6. PERIMETER DRIPLINE PIPE TO BE INSTALLED
7. ECO-ID ZONE OPERATION INDICATOR
8. LATERAL PIPE SUPPLY MANIFOLD WITHIN A 12" TRENCH, PER PIPE DETAIL
9. CONNECTION FROM SUPPLY MANIFOLD TO DRIPLINE (TYPICAL)- SEE INSET B
10. SUB-SURFACE DRIPLINE TUBING: REFER TO LEGEND FOR SPECIFICATION
11. GALVANIZED TIE-DOWN STAKE, RAIN BIRD, MODEL TDS-050. (TYPICAL)
12. BARB x FEMALE FITTING: RAIN BIRD XFD-TFA-075 OR XFF-TMA-050 WITH PVC THREADED COUPLER
13. PVC SCH 80 NIPPLE, 6" LENGTH FOR 12" LATERAL PIPE TRENCH DEPTH
14. PVC SCH 40 TEE OR EL, SxF
15. AIR / VACUUM RELIEF VALVE, REFER TO LEGEND FOR SPECIFICATION. INSTALLED WITHIN 7" ROUND VALVE BOX. CONNECTED TO PVC PIPE MANIFOLD. LOCATION AS SHOWN IS DIAGRAMMATIC ONLY

NOTES:
A. INSTALL AIR RELIEF VALVES AT ALL HIGH POINT(S) IN ZONE.
B. DISTANCE BETWEEN LATERAL ROWS TO BE BASED ON SOIL TYPE, PLANT MATERIALS AND CHANGES IN ELEVATION. MAXIMUM SPACING SHALL BE 12" APART FOR TURF AREAS. MAXIMUM SPACING SHALL BE 18" APART FOR FLAT SHRUB AREAS.
C. INSTALL SUB-SURFACE TUBING MAXIMUM 3" FROM ANY HARDSCAPE EDGE IN TURF AND 9" IN SHRUBS.
D. PLACE TIE DOWN STAKES EVERY 3' IN SAND, 4' IN LOAM, AND 5' IN CLAY.
E. MAXIMUM TUBING LENGTH OF RUN IN EITHER DIRECTION SHALL NOT EXCEED 150' FROM LATERAL PIPE SUPPLY MANIFOLD.

## C DRIPLINE- CENTER FEED LAYOUT

SCALE: N.T.S.

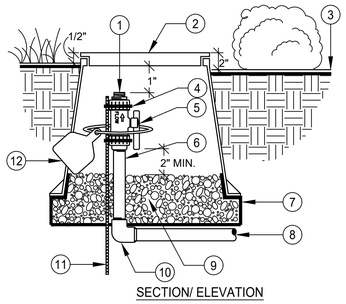


NOTES:
A. FOR TREE/PALM ZONES: PLACE FLUSH VALVE AT MINIMUM FORTY EIGHT (60") INCHES FROM TREE/PALM ROOT BALL, TYPICAL.
B. POINT SOURCE DRIP ZONES: INSTALL ON PVC 'BACKBONE' PIPE. INSTALL ONE (1) FV IN EACH DIRECTION FROM RCV AT MINIMUM, OR AS MANY AS SHOWN ON THE PLAN IN ANY ZONE.
C. FOR SUB-SURFACE DRIPLINE ZONE: INSTALL ONE (1) FV FOR MAXIMUM OF EVERY 800 FEET OF TUBING, OR PART THEREOF, IN ANY ZONE.
D. INSTALL IN LOCATIONS AS DESCRIBED IN THE LEGEND.
E. DUE TO FIELD CHANGES OR OTHER UNFORESEEN ISSUES TOTAL FLUSH VALVE SYMBOLS SHOWN ON PLAN MAY NOT EQUAL TOTAL QUANTITY OF FLUSH VALVE'S REQUIRED.
F. CONTRACTOR SHALL REVIEW TREE DRIP ZONE AREA AND LAYOUT TO DETERMINE EXACT QUANTITY OF FV'S TO INSTALL. DUE TO FIELD CHANGES OR OTHER REASONS TOTAL FLUSH VALVE SYMBOLS SHOWN ON PLAN MAY NOT EQUAL TOTAL QUANTITY OF FV'S REQUIRED.
G. SET TOP OF VALVE BOX 1/2" ABOVE FINISHED GRADE IN TURF AREAS.
H. IN SHRUB AREAS INSTALL VALVE BOX 2" ABOVE SOIL LEVEL OR 1" ABOVE MULCH LAYER, WHICHEVER IS HIGHER.

LEGEND
1. BRASS HOSE/PIPE ADAPTER, ARROWHEAD BRASS/CHAMPION IRRIGATION PRODUCTS, MODEL #10F (3/4" MALE HOSE THREAD TO 1/2" MALE PIPE THREAD)
2. 7" ROUND SPECIFICATION GRADE VALVE BOX, HEAT BRAND "FV" ONTO LID
3. FINISH GRADE
4. STAINLESS STEEL CLAMPS, TYP.
5. 1/2" PVC SCH 80 THREADED BALL VALVE. REFER TO LEGEND FOR SPECIFICATION
6. SCH 80 PVC NIPPLE 1/2" x LENGTH AS REQUIRED
7. LANDSCAPE FABRIC
8. WHEN USED FOR SUB-SURFACE TUBING DRIP ZONES, REFER TO LEGEND: PVC SCH 40 PIPE FROM DRIP ZONE MANIFOLD 'FOOTER'. MANIFOLD PIPE SIZE BASED ON ZONE FLOW. REFER TO LEGEND FOR PIPE SIZE.
9. 3/4" CRUSHED GRAVEL, MIN. 5"-6" DEPTH
10. PVC SLIP (LINE SIZE) x 1/2" THREAD ELL (SF)
11. (#3) 3/8" x 24" REBAR STAKE
12. APPURTENANCE PURPLE ID TAG

## D DRIP ZONE FLUSH VALVE ASSEMBLY

SCALE: N.T.S.

LEGEND
1. PVC SUPPLY HEADER PIPE
2. PVC SCH 40 TEE OR EL (TYPICAL)
3. BARB X MALE FITTING (TYPICAL): RAIN BIRD, XFF-MA-XXX FITTING
4. PVC LATERAL PIPE FROM DRIP ZONE RCV ASSEMBLY
5. SUB-SURFACE DRIPLINE: REFER TO LEGEND FOR SPECIFICATION
6. PLANTER EDGE; PERIMETER OF AREA
7. MAXIMUM INSTALLED DISTANCE FOR PERIMETER DRIPLINE TUBING SHALL BE 3" IN TURF AND 9" IN SHRUBS, FROM PERIMETER OF AREA
8. GLVANIZED TIE-DOWN STAKE, RAIN BIRD, MODEL TDS-050. (TYPICAL) REFER TO LEGEND FOR SPACING
9. FLUSH VALVE WITHIN A 7" ROUND VALVE BOX, TYPICAL. REFER TO LEGEND FOR TYPE. INSTALL VALVE ON EXHAUST HEADER/FOOTER IN PLANTERS AS SHOWN. (TYPICAL)
10. BARB X BARB INSERT TEE OR EL: (TYPICAL) RAIN BIRD MODEL: XFF-TEE, XFF-EL
11. PVC RISER PIPE
12. PVC LATERAL SUPPLY PIPE
13. PVC SLEEVE PIPE. SIZED TWICE THE SIZE OF MANIFOLD PIPE SIZE
14. HARDSCAPE PAVEMENT/CURB, OR SIDEWALK
15. 6" OF SOIL COVER OVER DRIPLINE TUBING
16. SUB-FINISH GRADE
17. PVC LATERAL SUPPLY PIPE SHALL BE INSTALLED WITHIN PLANTERS UNLESS CROSSING PAVEMENT TO ADJACENT PLANTER

## E DRIPLINE- MULTPLE PLANTERS LAYOUT

SCALE: N.T.S.

Plot Date:

KAISER PERMANENTE®

**FOLSOM MOB**
285 Palladio Pkwy,
Folsom, CA 95630

**SMITHGROUP**
550 SOUTH HOPE STREET
SUITE 1950
LOS ANGELES, CA 90071
213.228.6900
smithgroup.com

| ISSUED FOR | REV | DATE |
|---|---|---|
| ENTITLEMENTS | | 9/26/2022 |

SEALS AND SIGNATURES

NOT FOR CONSTRUCTION

SHEET TITLE
IRRIGATION DETAILS

PROJECT NUMBER 13931.000

SHEET NUMBER L9.2.6

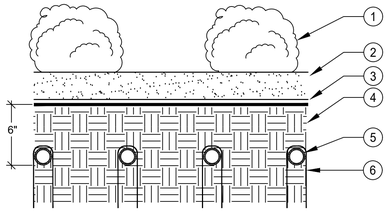


SECTION

NOTES:
A. TO INSURE EVEN PARALLEL AND LEVEL TUBING ROWS IT IS RECOMMENDED THAT THE SOIL LEVEL IN THE PLANTER AREAS BE BROUGHT TO SIX INCHES BELOW FINISH GRADE, LEVELED, AND PROPERLY COMPACTED AS PER THE LANDSCAPED DRAWINGS PRIOR TO THE INSTALLATION OF THE TUBING.
B. INSTALL TUBING AS INDICATED ON THESE DRAWINGS AND SECURE TO GRADE USING GALVANIZED WIRE HOOP STAKES AT 4 O.C. SPACING.

LEGEND
1. SHRUBS/GROUND COVER
2. MULCH LAYER, REFER TO LANDSCAPE DRAWINGS FOR TYPE AND DEPTH
3. FINISH GRADE
4. AMENDED SOIL, REFER TO LANDSCAPE DRAWINGS FOR SPECIFICATION
5. DRIPLINE TUBING INSTALLATION: 6" BELOW FINISH GRADE
6. GALVANIZED WIRE STAKE, SPACE AT 4 FEET O.C. ALONG ALL TUBING

## A DRIPLINE INSTALLATION

SCALE: N.T.S.

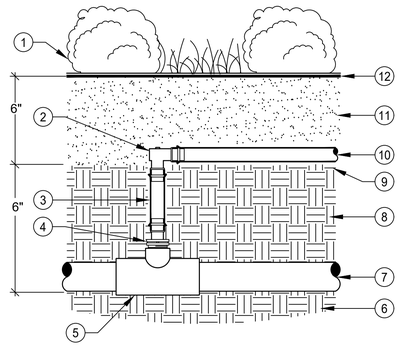


SECTION/ELEVATION

NOTES:
A. REFER TO LEGEND FOR MAXIMUM DRIPLINE TUBING SPACING.
B. LAY DEPTH FOR DRIPLINE SHALL BE 6 INCHES BELOW AMENDED SOIL FINISH GRADE.
C. INSTALL FIRST ROW OF DRIPLINE TUBING 6 INCHES FROM ANY HARDSCAPE EDGE.

LEGEND
1. SHRUBS/GROUND COVER
2. 17mm BARB 90 ELBOW FITTING, REFER TO LEGEND FOR SPECIFICATION
3. 1/2" BLANK POLY TUBING, REFER TO LEGEND FOR SPECIFICATION
4. 1/2" MIPT x 17mm BARB ADAPTER, REFER TO LEGEND FOR SPECIFICATION
5. PVC SCH 40 SST TEE/EL FITTING, LINE SIZE X 1/2"
6. SITE SOIL
7. PVC SUPPLY / EXHAUST MANIFOLD HEADER LATERAL LINE
8. SCREENED BACKFILL MATERIAL
9. SUB-GRADE
10. 17mm DRIPLINE TUBING, REFER TO LEGEND FOR SPECIFICATION
11. AMENDED SOIL. REFER TO PLANTING DRAWINGS FOR SPECIFICATION
12. FINISH GRADE

## B DRIPLINE- PVC / DRIPLINE MANIFOLD CONNECTION

SCALE: N.T.S.

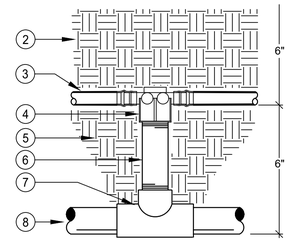


SECTION/ELEVATION

LEGEND
1. MULCH LAYER, REFER TO LANDSCAPE DRAWINGS FOR TYPE AND DEPTH
2. AMENDED SOIL, REFER TO LANDSCAPE DRAWINGS FOR SPECIFICATION
3. SUB-SURFACE DRIPLINE TUBING. REFER TO LEGEND FOR SPECIFICATION
4. 17mm BARB TEE x 3/4" THRD. FITTING. REFER TO LEGEND FOR SPECIFICATION
5. AMENDED SOIL / BACKFILL MATERIAL
6. 3/4" SCH 80 PVC NIPPLE. LENGTH AS REQUIRED
7. SCH 40 PVC TEE SxSxT, LINE SIZE BY 3/4"
8. PVC SUPPLY MANIFOLD HEADER LATERAL LINE

## C DRIPLINE- CTR FEED PVC / DRIP CONNECT

SCALE: N.T.S.

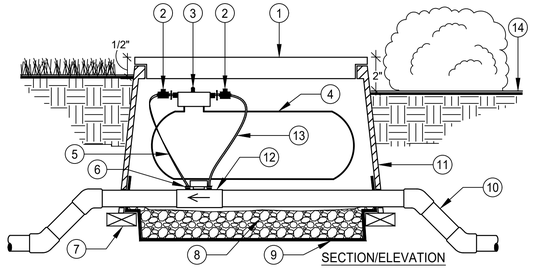


SECTION/ELEVATION

LEGEND
1. RECTANGULAR SPECIFICATION GRADE VALVE BOX WITH BOLT DOWN 'T' COVER. REFER TO LEGEND FOR SPECIFICATION. USE INVERTED VALVE BOX OF SAME SIZE AS REQUIRED FOR EXTENSION. INSTALL SIZE AS REQUIRED TO ALLOW FOR MAINTENANCE OF INJECTOR. HEAT BRAND "FERT" ON LID
2. EZ FLO SHUT OFF VALVES
3. PROPORTIONING CAP WITH FEED ADJUSTMENT KNOB
4. FERTIGATION SYSTEM INJECTION TANK, REFER TO LEGEND FOR MODEL AND GALLON CAPACITY
5. FERTILIZER OUT - CONNECT CLEAR TUBE TO GREEN CONNECTIONS ON PROPORTIONING CAP AND COUPLING
6. 1/4" TUBING CLAMP - BOTH THE GREEN AND BLUE COUPLING TUBING CONNECTIONS
7. SUPPORT BRICKS, (MIN. 6 REQ.)
8. 3/4" CRUSHED GRAVEL, MIN. 8" IN DEPTH
9. LANDSCAPE FABRIC
10. MAINLINE PIPE, SEE LEGEND FOR SIZE AND TYPE
11. RECTANGULAR VALVE BOX EXTENSION
12. EZ BALL VALVE INJECTION COUPLING CONNECTOR - INSTALL ACCORDING TO WATER FLOW DIRECTION ARROW
13. WATER IN - CONNECT BLACK TUBE TO BLUE CONNECTIONS ON PROPORTIONING CAP AND COUPLING
14. TOP OF MULCH LAYER. REFER TO PLANTING SPECIFICATIONS FOR DEPTH

NOTES:
A. CONTACT EZ-FLO SYSTEMS, ROCKLIN, CA (866) 393-5601, FOR ADDITIONAL INSTALLATION INFORMATION, IF NEEDED.
B. MODEL EZ-017-HC SLIGHTLY DIFFERENT CONFIGURATION. UNIT INCLUDES A FILL VALVE AND DRAIN VALVE. REFER TO EZ-FLO SYSTEMS FOR MORE INFORMATION.
C. INSTALL PVC SCH 80 45 DEGREE ELLS AS REQUIRED TO ACHIEVE PROPER INSTALLATION ABOVE MAINLINE DEPTH ON UPSTREAM AND DOWNSTREAM SIDE.
D. ITEMS 3, 4, 5, 6, 7 AND 8 ARE INCLUDED WITH THE EZ-FLO SYSTEM. ITEM 11 IS PURCHASED SEPARATELY.
E. SET TOP OF VALVE BOX 1/2" ABOVE FINISHED GRADE IN TURF AREAS.
F. IN SHRUB AREAS INSTALL VALVE BOX 2" ABOVE SOIL LEVEL OR 1/2" ABOVE MULCH LAYER, WHICHEVER IS HIGHER.

## D FERTIGATION INJECTOR INSTALLATION

SCALE: N.T.S.

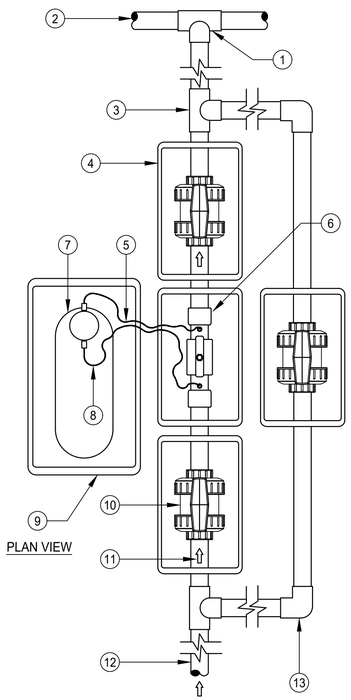


PLAN VIEW

LEGEND
1. PVC SCH 80 TEE FITTING, MAINLINE SIZE, TYP.
2. PVC MAINLINE. REFER TO LEGEND FOR TYPE
3. PVC SCH 80 TEE SLIP FITTING, TYP.
4. 12" STANDARD RECTANGULAR SPECIFICATION GRADE VALVE BOX. HEAT BRAND "BV" ON LID. TYP.
5. 1/4" "FERTILIZER OUT" TUBE
6. EZ-FLO BALL VALVE COUPLING CONNECTOR, CBV-XXX. MAINLINE SIZE
7. EZ-FLO FERTILIZER INJECTOR UNIT, REFER TO LEGEND FOR MODEL AND SIZE
8. 1/4" "WATER IN" TUBE
9. RECTANGULAR SPECIFICATION GRADE VALVE BOX. HEAT BRAND "FERT" ON LID. REFER TO LEGEND FOR SPECIFICATION. FIT FERTILIZER UNIT WITHIN FOR EASY REMOVAL. MINIMUM 3" CLEARANCE ON ALL SIDES OF UNIT
10. LASCO FULL BLOCK TRUE UNION PVC BALL VALVE WITH TEFLON SEATS AND EPDM O-RINGS, MODEL VXX101N. MAINLINE SIZE. (3 REQ.)
11. WATER FLOW DIRECTION
12. IRRIGATION MAINLINE FROM P.O.C. / BACKFLOW ASSEMBLY. REFER TO PLAN FOR MAINLINE SIZE. REFER TO LEGEND FOR TYPE
13. PVC SCH 80 EL FITTING, TYP.

## E FERTIGATION INJECTOR W/ BYPASS

SCALE: N.T.S.

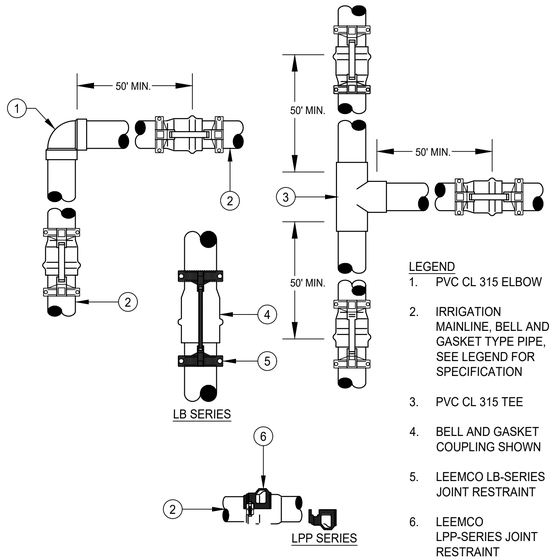


LEGEND
1. PVC CL 315 ELBOW
2. IRRIGATION MAINLINE, BELL AND GASKET TYPE PIPE, SEE LEGEND FOR SPECIFICATION
3. PVC CL 315 TEE
4. BELL AND GASKET COUPLING SHOWN
5. LEEMCO LB-SERIES JOINT RESTRAINT
6. LEEMCO LPP-SERIES JOINT RESTRAINT

NOTES:
A. USE JOINT RESTRAINTS ON ALL BELL AND GASKET MAINLINE PIPE.
B. USE LPP OR LB SERIES RESTRAINTS FOR BELL AND GASKET JOINTS.
C. INSTALL RESTRAINTS FOR TWO PVC BELL ENDS (JOINTS) OR 50 FEET BEFORE ANY CHANGE IN DIRECTION.
D. SIZE OF RESTRAINT TO BE AS PER PIPE AND FITTING USED.

## F PVC BELL JOINT RESTRAINT INSTALLATION

SCALE: N.T.S.

Plot Date:

KAISER PERMANENTE®

**FOLSOM MOB**

285 Palladio Pkwy,
Folsom, CA 95630

**SMITHGROUP**

550 SOUTH HOPE STREET
SUITE 1950
LOS ANGELES, CA 90071
213.228.6900
smithgroup.com

| ISSUED FOR | REV | DATE |
|---|---|---|
| ENTITLEMENTS | | 9/26/2022 |

SEALS AND SIGNATURES

NOT FOR CONSTRUCTION

SHEET TITLE
IRRIGATION DETAILS

PROJECT NUMBER 13931.000

SHEET NUMBER L9.2.7

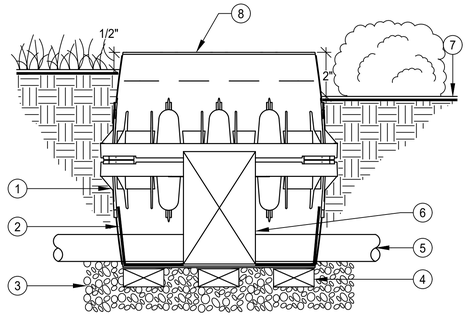


SECTION/ELEVATION

NOTES:
A. SET TOP OF VALVE BOX 1/2" ABOVE FINISHED GRADE IN TURF AREAS.
B. IN SHRUB AREAS INSTALL VALVE BOX 2" ABOVE SOIL LEVEL OR 1" ABOVE MULCH LAYER, WHICHEVER IS HIGHER.

LEGEND
1. INTERLOCKING VALVE BOX BOTTOM FOR DEEP INSTALLATION
2. LANDSCAPE FABRIC
3. 3/4" GRAVEL, MIN. 5" DEPTH
4. 4"X8" SUPPORT BRICK, 6 REQUIRED
5. PVC MAINLINE, REFER TO LEGEND FOR SPECIFICATION
6. IRRIGATION EQUIPMENT APPURTENANCE; MAY REQUIRE CONCRETE SUPPORT PAD UNDERNEATH
7. FINISH GRADE
8. RECTANGULAR SPECIFICATION GRADE VALVE BOX W/ BOLT DOWN 'T' COVER, HEAT BRAND RCV # ON TO LID. REFER TO LEGEND FOR SPECIFICATION

## A DRIP ASSEMBLY BOX INSTALLATION

SCALE: N.T.S.

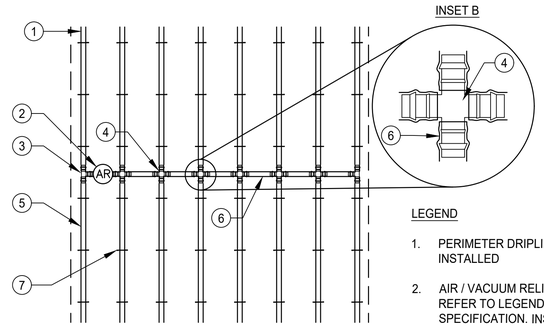


PLAN VIEW/SECTION

NOTES:
A. CONNECT ONE ARV AT EACH HIGH POINT IN ZONE, MOUNT ON BLANK TUBING INSTALLED PERPENDICULAR TO EACH DRIPLINE TUBING LINE TO CONNECT ALL DRIPLINES TO ARV. LOCATION SHOWN IN DRIPLINE LAYOUT DETAILS IS DIAGRAMMATIC ONLY.
B. INSTALL ONE (1) ARV FOR MAXIMUM OF EVERY 550 FEET OF TUBING, OR PART THEREOF, IN ANY ZONE.
C. INSTALL IN LOCATIONS AS DESCRIBED IN THE LEGEND AND DRIPLINE INSTALLATION DETAILS.
D. DUE TO FIELD CHANGES OR OTHER REASONS TOTAL ARV SYMBOLS SHOWN ON PLAN MAY NOT EQUAL TOTAL QUANTITY OF ARV'S REQUIRED.
E. CONTRACTOR SHALL REVIEW DRIP ZONE AREA AND LAYOUT TO DETERMINE EXACT QUANTITY OF ARV'S TO INSTALL.
F. IN SHRUB AREAS INSTALL VALVE BOX 2" ABOVE SOIL LEVEL OR 1" ABOVE MULCH LAYER, WHICHEVER IS HIGHER.

LEGEND
1. PERIMETER DRIPLINE PIPE TO BE INSTALLED
2. AIR / VACUUM RELIEF VALVE, REFER TO LEGEND FOR SPECIFICATION. INSTALLED WITHIN 7" ROUND VALVE BOX AT HIGH POINT(S) IN ZONE. LOCATION PLACEMENT AS SHOWN IS DIAGRAMMATIC ONLY. INSTALL AT ALL ZONE HIGH POINTS
3. RAIN BIRD INSERT TEE FITTING, MODEL XFF-TEE
4. RAIN BIRD INSERT CROSS FITTING, MODEL XFD-CROSS. SEE INSET B
5. SUB-SURFACE DRIPLINE TUBING: REFER TO LEGEND FOR SPECIFICATION
6. 17mm NETAFIM DRIPLINE BLANK TUBING, MODEL TLDL00X, OR EQUAL
7. GALVANIZED TIE-DOWN STAKE, RAIN BIRD, MODEL TDS-050. (TYPICAL)

## B DRIP RCV ASSEMBLY ALTERNATE INSTALLATION

SCALE: N.T.S.

LEGEND
1. FLUSH VALVE (TYPICAL) WITHIN 7" ROUND BOX. REFER TO LEGEND FOR SPECIFICATION
2. AIR / VACUUM RELIEF VALVE, REFER TO LEGEND FOR SPECIFICATION. INSTALLED WITHIN 7" ROUND VALVE BOX. CONNECTED TO PVC PIPE MANIFOLD. LOCATION AS SHOWN IS DIAGRAMMATIC ONLY
3. PVC EXHAUST HEADER
4. BARB X MALE FITTING: RAIN BIRD XFF-MA-XXX FITTING (TYPICAL)
5. RAIN BIRD QF-DRIPLINE HEADER:
   -USE 3/4" FOR ZONE OR 'ZONE SECTION' FLOWS 9 GPM OR LESS
   -USE 1" FOR ZONE OR 'ZONE SECTION' FLOWS 10 GPM TO 15 GPM
6. QF DRIPLINE PRE-NSTALLED BARB FITTING
7. PVC SCH 40 THREADED TEE OR ELL (TYPICAL)
8. EDGE OF SIDEWALK / HARDSCAPE
9. PVC SCH 40 EL. SIZE PER QF MANIFOLD SIZE
10. PVC SCH 40 PIPE. SIZE PER QF DRIPLINE HEADER
11. NON-PLANTED ARE., 'DG' OR MULCH COVER.
12. PVC INSERT ADAPTER (BARB X SOC), SPEARS, MODEL 474-007 OR 474-010. SIZED TO FIT SUPPLY PIPE (3/4" OR 1") (TYP.)
13. PVC PIPE FROM RCV OR ADJACENT ZONE SECTION (SIZED TO MEET LATERAL FLOW DEMAND, REFER TO PLAN FOR SIZE). INSTALL PVC PIPE AT DEPTH PER PIPE DETAIL OR SPECIFICATION
14. PVC SUPPLY HEADER
15. SUB-SURFACE DRIPLINE TUBING: REFER TO LEGEND FOR SPECIFICATION
16. AIR RELIEF VALVE: RAIN BIRD, MODEL ARV050, WITHIN 7" ROUND VALVE BOX. CONNECTED TO PVC PIPE MANIFOLD. LOCATION AS SHOWN IS DIAGRAMMATIC ONLY
17. PVC CAP. SPEARS, MODEL 447-007 OR 447-010. SIZED TO FIT INSERT ADAPTER (3/4" OR 1"). SEE INSET 'A'
18. PCV INSERT MALE ADAPTER, SPEARS, MODEL 4XX-007 OR 4XX-010. SIZED TO FIT EL
19. STAINLESS STEEL CLAMP, OETIKER OR MURRAY

NOTES:
A. DETAIL DESCRIBES QF MANIFOLD LAYOUT. USE SAME DESIGN INTENT OF ROUTED AROUND TREES FOR ANY PVC MANIFOLD LAYOUT.
B. QF-MANIFOLD SHALL ALWAYS BE INSTALLED AT DEPTH TO ACCOMMODATE THE 6" INSTALLATION DEPTH FOR DRIPLINE TUBING.
C. DISTANCE BETWEEN LATERAL ROWS TO BE BASED ON SOIL TYPE, PLANT MATERIALS AND CHANGES IN ELEVATION. MAXIMUM SPACING SHALL BE 12" APART FOR TURF AREAS. MAXIMUM SPACING SHALL BE 18" APART FOR FLAT SHRUB AREAS.
D. INSTALL SUB-SURFCE TUBING MAXIMUM 3" FROM ANY HARDSCAPE EDGE IN TURF AND 9" IN SHRUBS.
E. AIR RELEASE / VACUUM VALVE WHERE SHOWN IS DIAGRAMMATIC ONLY. PLACE AT HIGHEST POINT IN AREA FOR PROPER VACUUM RELEASE ACTION.

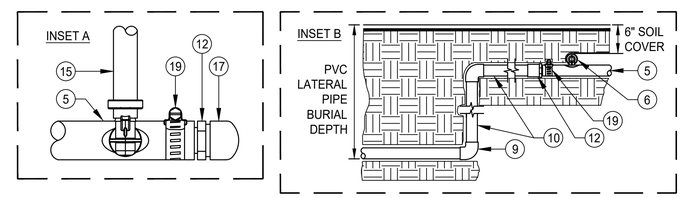


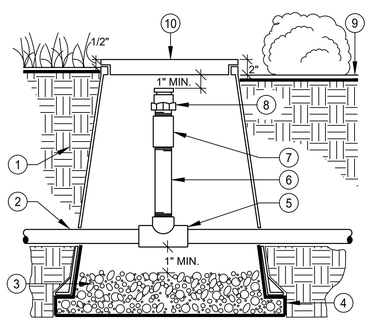


SECTION/ELEVATION

NOTES:
A. CONNECT ONE ARV AT EACH HIGH POINT IN ZONE WHEN HIGH POINT IS AJACENT HEADER/FOOTER MANIFOLD. LOCATION SHOWN IN DRIPLINE LAYOUT DETAILS IS DIAGRAMMATIC ONLY.
B. INSTALL ONE (1) ARV ON PVC HEADER OR EXHAUST PIPE FOR MAXIMUM OF EVERY 550 FEET OF DRIPLINE OR ECO-MAT TUBING, OR PART THEREOF, IN ANY ZONE.
C. INSTALL AT EVERY HIGH POINT LOCATION WITHIN ZONE AS DESCRIBED IN THE LEGEND .
D. DUE TO FIELD CHANGES OR OTHER REASONS TOTAL ARV SYMBOLS SHOWN ON PLAN MAY NOT EQUAL TOTAL QUANTITY OF ARV'S REQUIRED.
E. CONTRACTOR SHALL REVIEW DRIP ZONE AREA AND LAYOUT TO DETERMINE EXACT QUANTITY OF ARV'S TO INSTALL IN SHRUB AREAS.
F. INSTALL VALVE BOX 2" ABOVE SOIL LEVEL OR 1" ABOVE MULCH LAYER, WHICHEVER IS HIGHER.

LEGEND
1. AMENDED SOIL. REFER TO PLANTING PLAN FOR SPECIFICATION
2. PVC SUPPLY MANIFOLD OR EXHAUST HEADER PIPE
3. 3/4" CRUSHED GRAVEL, ± 1/2 CUBIC FT
4. LANDSCAPE FABRIC
5. SCH 40 PVC SST TEE, LINE SIZE x 1/2" TRD
6. 1/2" SCH 80 PVC NIPPLE. LENGTH AS REQUIRED
7. SCH 40 PVC TT COUPLER
8. AIR / VACUUM RELIEF VALVE, REFER TO LEGEND FOR SPECIFICATION
9. FINISH GRADE
10. 7" ROUND SPECIFICATION GRADE VALVE BOX, REFER TO LEGEND FOR TYPE. HEAT BRAND "ARV" ONTO LID

## D DRIPLINE-ARV PVC SUPPLY/EXHAUST MANIFOLD

SCALE: N.T.S.

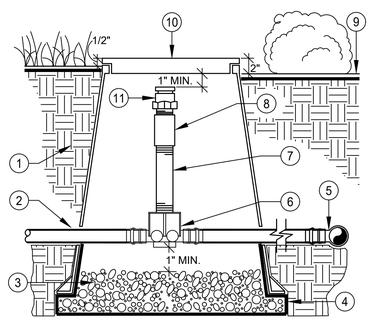


SECTION/ELEVATION

NOTES:
A. CONNECT ONE ARV AT EACH HIGH POINT IN ZONE, MOUNT ON BLANK TUBING INSTALLED PERPENDICULAR TO EACH DRIPLINE TUBING LINE TO CONNECT ALL DRIPLINES TO ARV. LOCATION SHOWN IN DRIPLINE LAYOUT DETAILS IS DIAGRAMMATIC ONLY.
B. INSTALL ONE (1) ARV FOR MAXIMUM OF EVERY 550 FEET OF TUBING, OR PART THEREOF, IN ANY ZONE.
C. INSTALL IN LOCATIONS AS DESCRIBED IN THE LEGEND AND DRIPLINE INSTALLATION DETAILS.
D. DUE TO FIELD CHANGES OR OTHER REASONS TOTAL ARV SYMBOLS SHOWN ON PLAN MAY NOT EQUAL TOTAL QUANTITY OF ARV'S REQUIRED.
E. CONTRACTOR SHALL REVIEW DRIP ZONE AREA AND LAYOUT TO DETERMINE EXACT QUANTITY OF ARV'S TO INSTALL.
F. IN SHRUB AREAS INSTALL VALVE BOX 2" ABOVE SOIL LEVEL OR 1" ABOVE MULCH LAYER, WHICHEVER IS HIGHER.

LEGEND
1. AMENDED SOIL. REFER TO PLANTING PLAN FOR SPECIFICATION
2. NETAFIM 17mm BLANK DRIP TUBING, MODEL TLDL00X, OR EQUAL. USE RAIN BIRD INSERT FITTINGS (CROSS AND TEES), MODELS XFD-CROSS AND XFF-TEE FOR CONNECTIONS
3. 3/4" CRUSHED GRAVEL, ± 1/2 CUBIC FT
4. LANDSCAPE FABRIC
5. BLANK TUBING CONNECTION TO INLINE DRIP TUBING AT EDGE OF ZONE (PARALLEL TO HARDSCAPE)
6. RAIN BIRD 17 mm TEE FITTING, MODEL XFF-TFA-050, BARB x 1/2" THRD.
7. 1/2" SCH 80 PVC NIPPLE. LENGTH AS REQUIRED
8. SCH 40 PVC 1/2" TT COUPLER
9. FINISH GRADE
10. 7" ROUND SPECIFICATION GRADE VALVE BOX, REFER TO LEGEND FOR TYPE. HEAT BRAND "ARV" ONTO LID
11. AIR / VACUUM RELIEF VALVE, REFER TO LEGEND FOR SPECIFICATION

## E DRIPLINE-1/2" ARV ON POLY TUBING

SCALE: N.T.S.

NOTES:
A. DETAIL DESCRIBES QF MANIFOLD LAYOUT. USE SAME DESIGN INTENT OF DRIPLINE ROUTING AROUND TREES FOR A PVC HEADER MANIFOLD LAYOUT.
B. DETAIL IS EXAMPLE OF A 5 TUBING ROW ZONE. ZONE MAY CONTAIN MORE OR LESS DRIPLINE TUBING ROWS.
C. QF-MANIFOLD SHALL ALWAYS BE INSTALLED AT DEPTH TO ACCOMMODATE THE 6" INSTALLATION DEPTH FOR DRIPLINE TUBING.
D. DISTANCE BETWEEN LATERAL ROWS TO BE BASED ON SOIL TYPE, PLANT MATERIALS AND CHANGES IN ELEVATION. MAXIMUM SPACING SHALL BE 12" APART FOR TURF AREAS. MAXIMUM SPACING SHALL BE 18" APART FOR FLAT SHRUB AREAS.
E. INSTALL SUB-SURFCE TUBING MAXIMUM 3" FROM ANY HARDSCAPE EDGE IN TURF AND 9" IN SHRUBS.
F. AIR RELEASE / VACUUM VALVE WHERE SHOWN IS DIAGRAMMATIC ONLY. PLACE AT HIGHEST POINT IN AREA FOR PROPER VACUUM RELEASE ACTION.

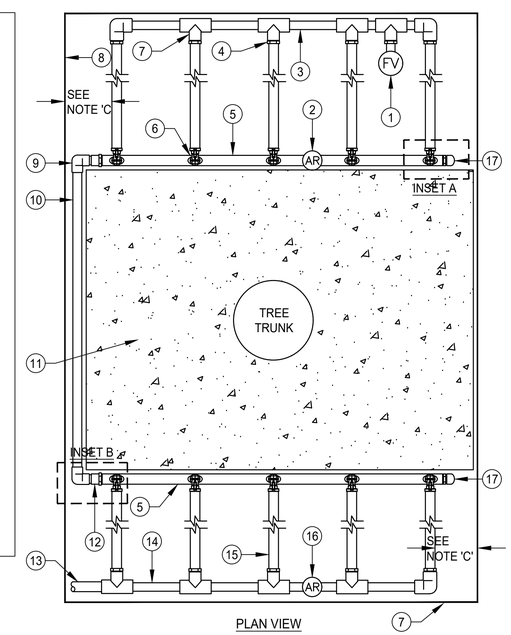


PLAN VIEW

## F DRIPLINE- HEADER ADJACENT TO TREES

SCALE: N.T.S.

Plot Date:

KAISER PERMANENTE®

**FOLSOM MOB**

285 Palladio Pkwy,
Folsom, CA 95630

**SMITHGROUP**

550 SOUTH HOPE STREET
SUITE 1950
LOS ANGELES, CA 90071
213.228.6900
smithgroup.com

| ISSUED FOR | REV | DATE |
|---|---|---|
| ENTITLEMENTS | | 9/26/2022 |

SEALS AND SIGNATURES

NOT FOR CONSTRUCTION

SHEET TITLE
IRRIGATION DETAILS

PROJECT NUMBER 13931.000

SHEET NUMBER L9.2.8

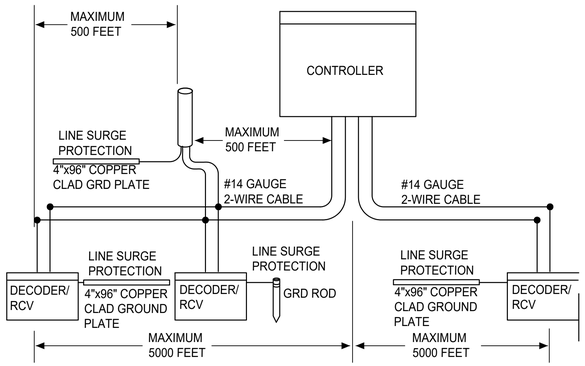


NOTES:
A. LINE SURGE PROTECTOR SHALL BE INSTALLED EVERY 450-500 FEET OR FOR EVERY EIGHT DECODERS ON TWO-WIRE PATH.
B. LINE SURGE PROTECTOR SHALL BE INSTALLED AT END OF CABLE RUN THAT TERMINATES IN THE FIELD.
C. FOR END CABLE RUN CONTRACTOR SHALL USE GROUND PLATE WITH 25' #6 GROUND WIRE ATTACHED TO GROUND PLATE FROM FACTORY.

## A DECODER 2-WIRE CABLE LAYOUT

SCALE: N.T.S.

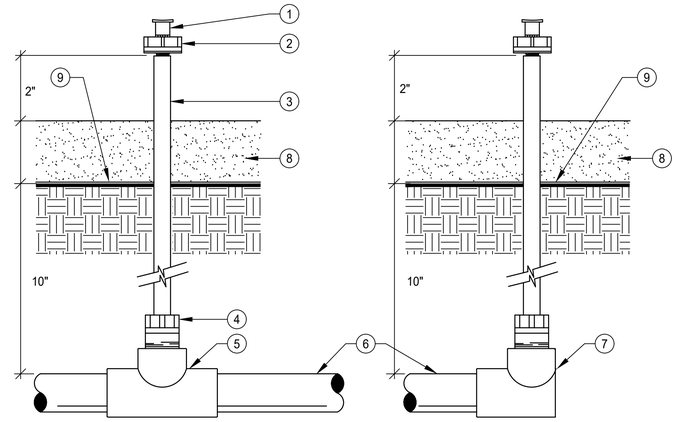


LEGEND
1. PC DIFFUSER CAP FOR 5 GPH AND LARGER EMITTERS, RAIN BIRD, MODEL PC-DIFF
2. EMITTER, RAIN BIRD, MODEL XB-XX-1032 / PC-XX-1032 PC
3. PRE- ASSEMBLED POLYFLEX RISER / ADAPTER, RAIN BIRD, MODEL PFR/FRA24. TRIM 2" ABOVE MULCH LAYER
4. ADAPTER, PART OF PFR/FRA ASSEMBLY
5. 1/2" PVC SCH 40 SXSXT TEE
6. 1/2" SCH 40 PVC SUB-LATERAL LINE, TYPICAL. FOR DESIGN CLARITY SUB-LATERAL PIPE IS NOT SHOWN ON IRRIGATION PLAN
7. 1/2" PVC SCH 40 SXF ELL
8. MULCH LAYER. REFER TO LANDSCAPE SPECIFICATIONS FOR DEPTH
9. SOIL FINISH GRADE

## B POINT SOURCE DRIP EMITTER ASSEMBLY

SCALE: N.T.S.

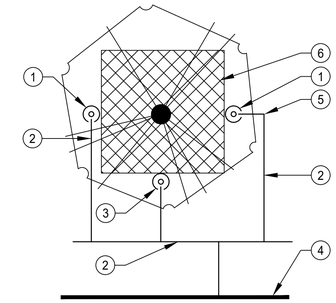

SECTION/ELEVATION

LEGEND
1. DRIP EMITTER (BUBBLER) PLACEMENT FOR 15 GALLON SHRUB, TYP. REFER TO #3 FOR SAME TYPE
2. 1/2" SCH 40 PVC 'SUB-LATERAL' PIPE, TYP. NOT SHOWN ON PLAN FOR DESIGN CLARITY
3. DRIP EMITTER (BUBBLER) PLACEMENT FOR 1 OR 5 GALLON SHRUB, TYP. RAIN BIRD MODEL XB-XX-1032, XERI-BUG SERIES OR PC-XX-1032 PC MODULES SERIES WITH PC DIFFUSER CAP. INSTALL WITH RAIN BIRD PRE-ASSEMBLED POLYFLEX RISER / ADAPTER, MODEL PFR12/24/FRA. PLACE EMITTERS (BUBBLERS) AT EDGE OF ROOTBALL. ADJUST PER ROOTBALL SIZE, TYPICAL
4. SCH 40 PVC 'BACKBONE' LATERAL PIPE, AS SHOWN ON PLAN. SEE PLAN FOR SIZE WITHIN ZONE
5. 1/2" PVC ELBOW AS REQUIRED
6. ROOT BALL OF SHRUB

## C POINT SOURCE DRIP EMITTER LAYOUT

SCALE: N.T.S.

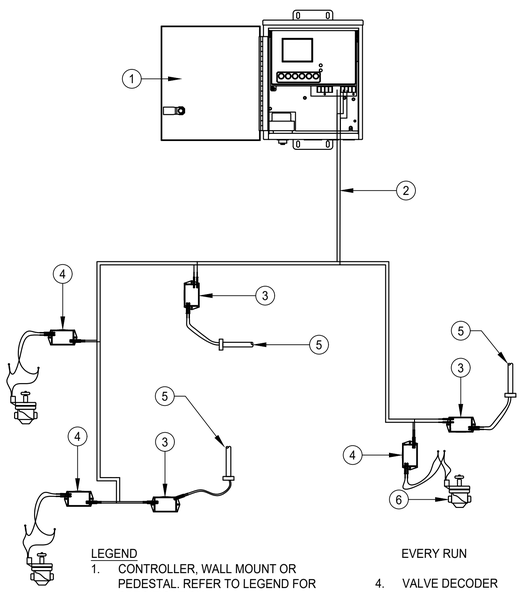

LEGEND
1. CONTROLLER, WALL MOUNT OR PEDESTAL. REFER TO LEGEND FOR SPECIFICATION
2. 2-WIRE CABLE (PATH) WITHIN 1-1/4" CONDUIT
3. LINE SURGE PROTECTOR. INSTALL @ MAX. 450 - 500 FOOT INTERVALS ALONG 2-WIRE PATH AND AT TERMINUS OF EVERY RUN
4. VALVE DECODER
5. GROUND ROD WITH CADWELD CONNECTION. MIN. 10 OHMS RESISTANCE REQUIRED
6. ZONE VALVE (TYP.)

## D GENERIC TWO-WIRE PATH LAYOUT

SCALE: N.T.S.

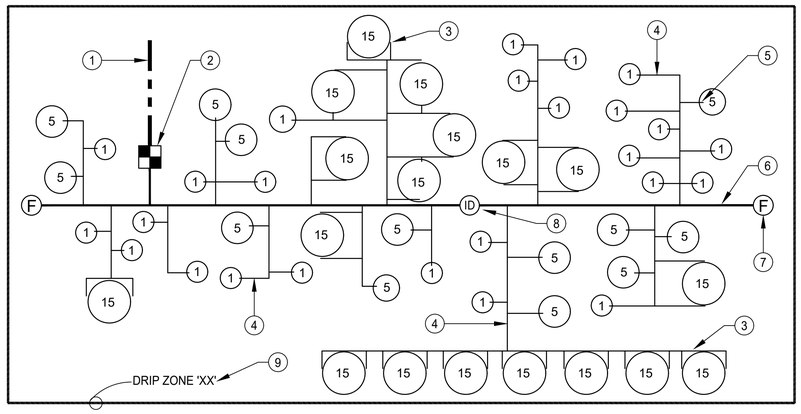


LEGEND
1. MAINLINE, REFER TO LEGEND FOR TYPE.
2. DRIP CONTROL VALVE ASSEMBLY, REFER TO LEGEND FOR TYPE
3. 15 GALLON SHRUB 'DOUBLE EMITTER' LAYOUT EXAMPLE
4. 1/2" SCH 40 PVC DRIP SUB-LATERAL PIPE, TYPICAL. FOR DESIGN CLARITY, SUB-LATERAL PIPE IS NOT SHOWN ON IRRIGATION PLAN
5. EMITTER PLACEMENT (TYPICAL), SEE DETAIL ON THIS SHEET
6. DRIP 'BACKBONE' SCH 40 PVC LATERAL PIPE, SEE PLAN FOR SIZE WITHIN ZONE. 'BACKBONE' PIPE IS SHOWN WITHIN DRIP ZONE ON IRRIGATION PLAN
7. FLUSH VALVE WITHIN 7" ROUND VALVE BOX, TYPICAL.
8. ECO-ID ZONE OPERATION INDICATOR
9. OUTLINED ZONE DESIGNATION, SEE PLAN

NOTES:
A. CONTRACTOR SHALL ROUTE SUB-LATERAL PIPE THROUGHOUT ZONE USING BEST INSTALLATION PRACTICES.
B. FOR SLOPED PLANTERS ALL EMITTERS ARE REQUIRED TO BE PLACED 6"-12" ABOVE PLANT ROOT BALL ON THE UPHILL SIDE OF PLANT DEPENDING ON SLOPE ANGLE.
C. FINAL HEIGHT ABOVE PLANT SHALL BE DETERMINED IN THE FIELD BASED ON SLOPE ANGLE. AFTER SUFFICIENT RUN TIME, WETTING PATTERN SHALL APPROXIMATELY REPRESENT NO MORE THAN 2/3 WET PATTERN BELOW PLANT STEM WITH 1/3 WET PATTERN ABOVE PLANT STEM.
D. FOR SINGLE EMITTER INSTALLATION: PLACE EMITTER ABOVE PLANT IN LOCATION TO ALLOW WATER TO FLOW ACROSS CENTER OF ROOTBALL.
E. FOR MULTIPLE EMITTERS INSTALLATION: PLACE EMITTERS ABOVE PLANT IN LOCATIONS TO ALLOW WATER TO FLOW ON EITHER SIDE OF ROOTBALL.

## E POINT SOURCE DRIP PVC LATERAL LAYOUT

SCALE: N.T.S.

Plot Date:

KAISER PERMANENTE®

**FOLSOM MOB**
285 Palladio Pkwy,
Folsom, CA 95630

**SMITHGROUP**
550 SOUTH HOPE STREET
SUITE 1950
LOS ANGELES, CA 90071
213.228.6900
smithgroup.com

| ISSUED FOR | REV | DATE |
|---|---|---|
| ENTITLEMENTS | | 9/26/2022 |

SEALS AND SIGNATURES

NOT FOR CONSTRUCTION

SHEET TITLE
IRRIGATION DETAILS

PROJECT NUMBER 13931.000

SHEET NUMBER L9.2.9

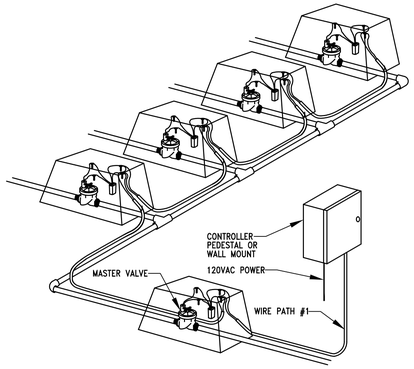


NOTES:
A. SINGLE TWO-WIRE PATH LINE SURGE PROTECTOR TO BE INSTALLED AT END OF WIRE RUN THAT TERMINATES IN THE FIELD.
B. MAKE ALL WIRE SPLICES IN VALVE BOXES.
C. LEAVE A MINIMUM OF 18" EXTRA WIRE AT ALL SPLICE POINTS ABOVE VALVE BOX. SIZE CABLE LOOP ACCORDINGLY.

## A DECODER SINGLE 2-WIRE PATH

SCALE: N.T.S.

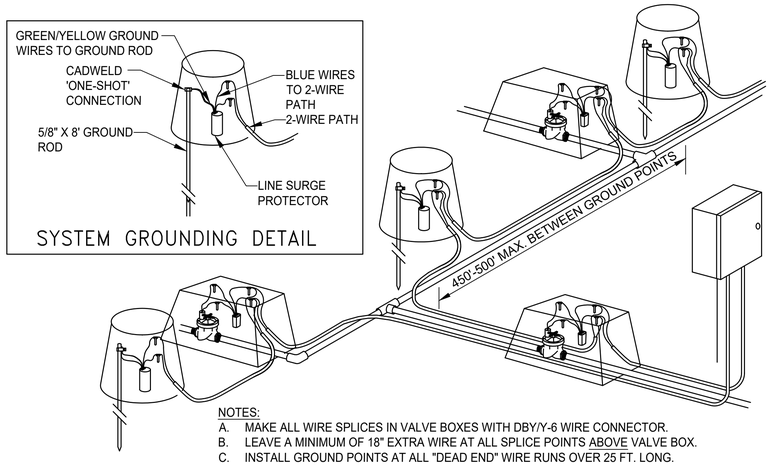


NOTES:
A. MAKE ALL WIRE SPLICES IN VALVE BOXES WITH DBY/Y-6 WIRE CONNECTOR.
B. LEAVE A MINIMUM OF 18" EXTRA WIRE AT ALL SPLICE POINTS ABOVE VALVE BOX.
C. INSTALL GROUND POINTS AT ALL "DEAD END" WIRE RUNS OVER 25 FT. LONG.
D. TEST EARTH TO GROUND RESISTANCE AT ALL GROUND POINTS.
E. ALL GROUND ASSEMBLIES INSTALLED IN VALVE BOXES.
F. EARTH TO GROUND RESISTANCE MUST BE LESS THAN 10 OHMS.

## B DECODER SYSTEM GROUNDING (TYP.)

SCALE: N.T.S.

NOTE:
1. ALL DECODERS SHALL HAVE A VALVE NUMBER ADDRESSED AT CONTROLLER PRIOR TO INSTALLATION.
2. USE U.F. SAFETY CABLE STRIPPER BY KING INNOVATION (MODEL NUMBER 46200) FOR ALL TWO-WIRE SPLICE CONNECTIONS.

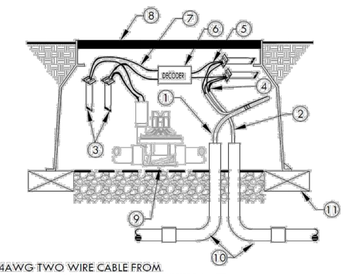


1. #14AWG TWO WIRE CABLE FROM CONTROLLER. REFER TO IRRIGATION NOTES FOR MODEL NUMBER OF WIRE. ALLOW A 24" SLACK PER DECODER. USE ELECTRICAL TAPE TO HOLD SLACK CABLES TOGETHER.
2. TWO WIRE CABLE TO NEXT DECODER
3. 3M DBR/Y-6 OR APPROVED EQUAL WATERPROOF SPLICE KIT (4 TOTAL)
4. A MAXIMUM OF 4" OF WIRE SHALL BE STRIPPED FROM TWO WIRE CABLE WHEN SPLICING AT DECODERS.
5. CONNECT CORRECT DECODER WIRES TO TWO WIRE CABLES.
6. DECODER
7. CONNECT CORRECT DECODER WIRES TO VALVE SOLENOID WIRES
8. VALVE BOX. REFER TO REMOTE CONTROL VALVE DETAIL FOR INSTALLATION INSTRUCTIONS.
9. REMOTE CONTROL VALVE. REFER TO REMOTE CONTROL VALVE DETAIL FOR INSTALLATION INSTRUCTIONS.
10. 1.25" CONDUIT FOR 2 WIRE CABLE WITH LONG SWEEPS IN AND OUT OF EACH VALVE BOX. SEAL ALL CONDUIT OPENINGS WITH WATERPROFF FOAM.
11. BRICK-ONE ON EACH CORNER

## C DECODER INSTALLATION

SCALE: N.T.S.

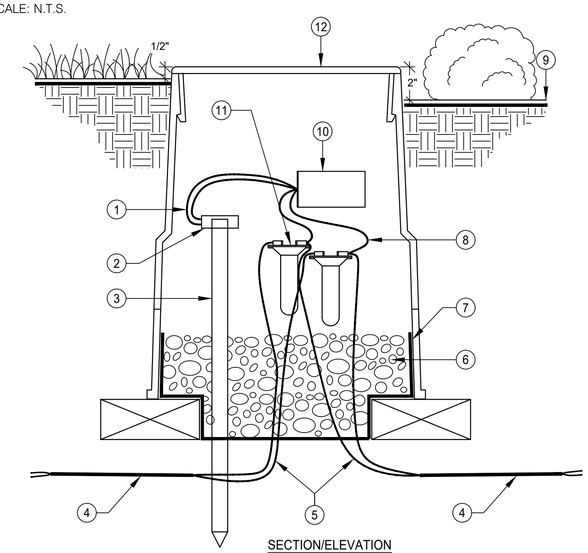


NOTES:
A. CONTRACTOR SHALL CONTACT SITEONE REPRESENTATIVE, ERIK ANDERSON, (949) 285-4048, FOR WIRING PROCEDURE AND ANY REQUIRED INSTALLATION INFORMATION.
B. LINE SURGE PROTECTOR SHALL BE INSTALLED EVERY 450-500 FEET OR FOR EVERY EIGHT DECODERS ON TWO-WIRE PATH.
C. LINE SURGE PROTECTOR TO BE INSTALLED AT END OF WIRE RUN THAT TERMINATES IN THE FIELD.

LEGEND
1. GREEN/YELLOW WIRE FROM LINE SURGE PROTECTION TO CADWELD' ONE-SHOT' CONNECTOR ON GROUNDING ROD (1 OF 2)
2. CADWELD 'ONE-SHOT' GROUNDING CONNECTOR
3. GROUNDING ROD OR PLATE: GROUNDED TO 10 OHMS OR LESS
4. 2-WIRE CABLE TO NEXT DEVICE (FIELD DECODER, SENSOR DECODER, LINE SURGE PROTECTOR OR CONTROLLER) WITHIN 1-1/4" ELECTRICAL CONDUIT
5. 2-WIRE CABLE TO SENSOR DECODER
6. 3/4" CRUSHED GRAVEL
7. LANDSCAPE FABRIC
8. BLUE WIRE FROM DECODER (1 OF 2)
9. FINISH GRADE OR TOP OF MULCH
10. LINE SURGE PROTECTOR. REFER TO LEGEND FOR TYPE
11. WIRE CONNECTOR
12. 10" ROUND SPECIFICATION GRADE VALVE BOX WITH COVER

## D CONNECTING LINE SURGE DECODER TO 2-WIRE PATH

SCALE: N.T.S.

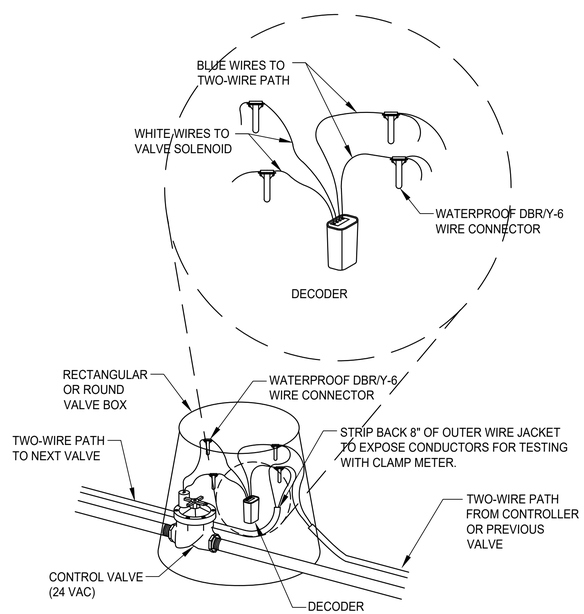


NOTES:
A. CONTRACTOR SHALL CONTACT SITEONE REPRESENTATIVE, ERIK ANDERSON, (949) 285-4048, FOR WIRING PROCEDURE AND ANY REQUIRED INSTALLATION INFORMATION.

## E DECODER WIRING

SCALE: N.T.S.

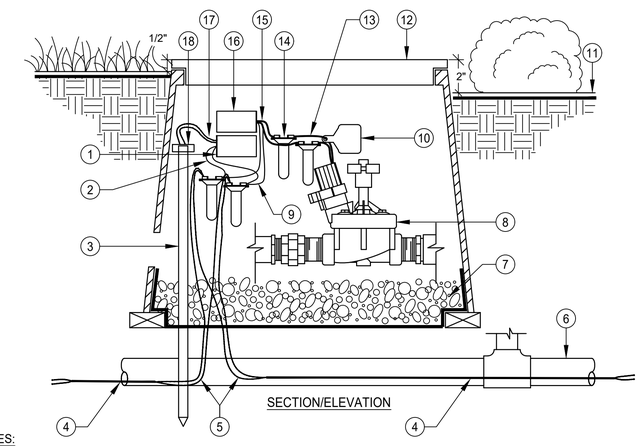


NOTES:
A. CONTRACTOR SHALL CONTACT SITEONE REPRESENTATIVE, ERIK ANDERSON, (949) 285-4048, FOR WIRING PROCEDURE AND ANY REQUIRED INSTALLATION INFORMATION.
B. SURGE PROTECTION SHOULD BE INSTALLED EVERY 450-500 FEET OR FOR EVERY EIGHT DECODERS ON 2-WIRE PATH.
C. MAXIMUM LENGTH OF SECONDARY WIRE PATH FROM DECODER TO SOLENOID IS 6 FEET.
D. PLACE 3 FEET OF EXTRA WIRE IN EVERY VALVE BOX FOR EASIER SERVICING.

LEGEND
1. LINE SURGE PROTECTOR. REFER TO LEGEND FOR TYPE
2. BLUE WIRE FROM LINE SURGE PROTECTOR
3. GROUNDING ROD OR PLATE: GROUNDED TO 10 OHMS OR LESS
4. 2-WIRE CABLE TO NEXT DEVICE (FIELD DECODER, SENSOR DECODER, LINE SURGE PROTECTOR OR CONTROLLER) WITHIN 1-1/4" ELECTRICAL CONDUIT. REFER TO LEGEND FOR TYPE
5. 2-WIRE CABLE TO DECODER
6. IRRIGATION MAINLINE
7. 3/4" CRUSHED GRAVEL
8. REMOTE CONTROL VALVE
9. BLUE WIRE FROM FIELD DECODER
10. ID TAG
11. FINISH GRADE OR TOP OF MULCH
12. RECTANGULAR SPECIFICATION GRADE VALVE BOX WITH COVER
13. SOLENOID WIRE (1 OF 2)
14. WIRE CONNECTOR, (1 OF 4)
15. WHITE WIRE FROM FIELD DECODER (1 OF 2)
16. FIELD DECODER (WITHOUT LINE SURGE PROTECTION). REFER TO LEGEND FOR TYPE
17. GREEN/YELLOW WIRE TO CADWELD' ONE-SHOT' CONNECTOR ON GROUNDING ROD (1 OF 2)
18. CADWELD 'ONE-SHOT' GROUNDING CONNECTOR

## F LINE SURGE DECODER CONNECTION

SCALE: N.T.S.

KAISER PERMANENTE®

**FOLSOM MOB**
285 Palladio Pkwy,
Folsom, CA 95630

**SMITHGROUP**
550 SOUTH HOPE STREET
SUITE 1950
LOS ANGELES, CA 90071
213.228.6900
smithgroup.com

| ISSUED FOR | REV | DATE |
|---|---|---|
| ENTITLEMENTS | | 9/26/2022 |

SEALS AND SIGNATURES

NOT FOR CONSTRUCTION

SHEET TITLE
IRRIGATION DETAILS

PROJECT NUMBER 13931.000

SHEET NUMBER L9.2.10

Plot Date: